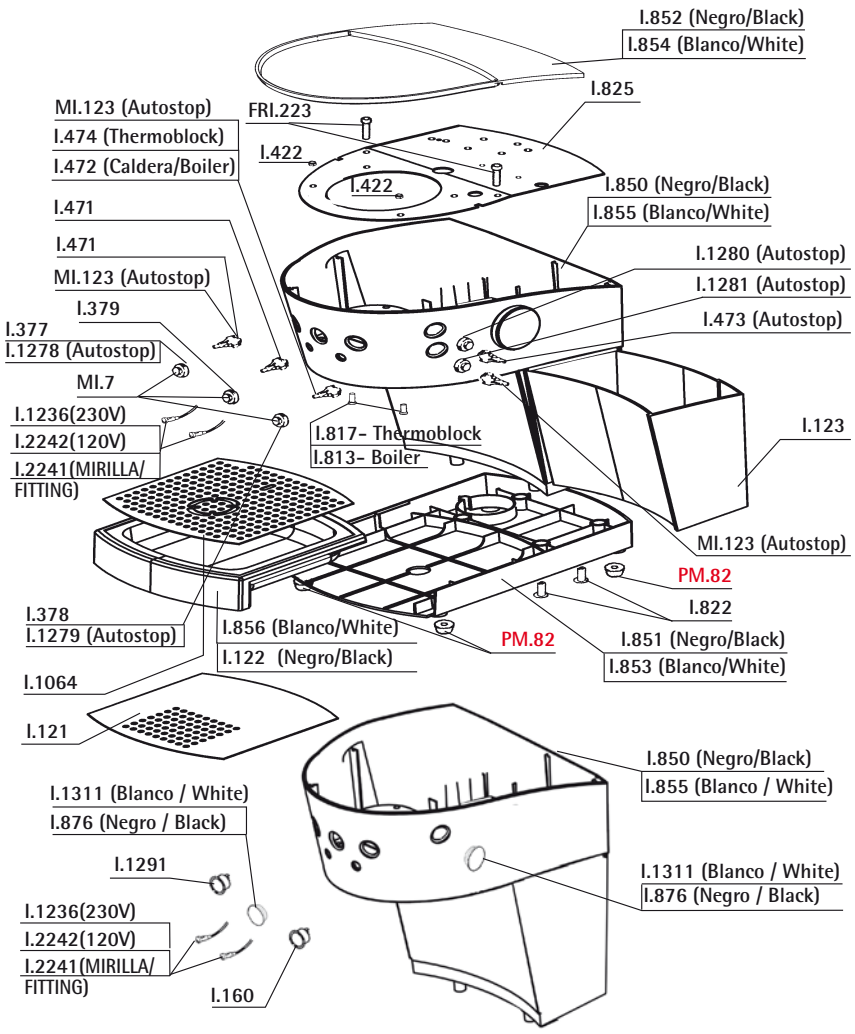

Ref.	Descripción	Description
FRI223	TORNILLO M4x6	SCREW
I.160	INT. UNIPOLAR ON-OFF S/SERIGRAFIA	ON-OFF SWITCH
I..121	REJILLA ARC	ARC GRID
I..122	BANDEJA ARC	ARC DRAIN TRAY
I..123	DEPOSITO ARC	ARC WATER TANK
I..377	SOPORTE INTERRUPTOR COFFEE	COFFEE SWICTH SUPPORT
I..378	SOPORTE INTERRUPTOR STEAM	STEAM SWICTH SUPPORT
I..379	SOPORTE INTERRUPTOR WATER	WATER SWICTH SUPPORT
I..422	TUERCA CON ARANDELA	WASHER WITH NUT
I..471	INTERRUPTOR UNIPOLAR	ONE POLE SWICTH
I..472	INTERRUPTOR UNIPOLAR CONMUTADO	6 FASTON ONE POLE SWICTH
I..473	INTERRUPTOR BIPOLAR	TWO POLES SWITCH
I..474	INTERRUPTOR BIPOLAR CONMUTADO	6 FASTON TWO POLES SWITCH
I..813	TORNILLO DIN 965 M4 X 10 ZN	DIN 965 M4 X 10 ZN SCREW
I..817	TORNILLO DIN 965 M4 X 25 ZN BASIC	DIN 965 M4 X 25 ZN BASIC SCREW
I..822	TORNILLO CUERPO	BODY SCREW
I..825	CHAPA MECANISMO BASIC	BASIC MECHANISME PLATE
I..850	CUERPO BASIC NEGRA	BLACK BASIC BODY
I..851	BASE BASIC NEGRA	BLACK BASIC BASE
I..852	TAPA BASIC NEGRA	BLACK BASIC LID
I..853	BASE BASIC BLANCA	WHITE BASIC BASE
I..854	TAPA BASIC BLANCA	WHITE BASIC LID
I..855	CUERPO BASIC BLANCO	WHITE BASIC BODY
I..856	BANDEJA BASIC BLANCA	WHITE BASIC TRAY
I.876	TAPÓN ACCIONADOR VAPOR	STEAM CAP
I.1064	REJILLA BASIC MOKADOR	BASIC MOKADOR DRIP TRAY
I.1236	PILOTO AZÚL 230V STEEL/BAR/BASIC	BLUE PILOT 230V STEEL/BAR/BASIC
I.1278	SOPORTE INT. COFFEE SHORT	SHORT COFFEE SWITCH SUPPORT
I.1279	SOPORTE INT. COFFEE LONG	LONG COFFEE SWITCH SUPPORT
I.1280	SOPORTE INT. STEAM MODE	MODE STEAM SWITCH SUPPORT
I.1281	SOPORTE INT. WATER STEAM	STEAM WATER SWITCH SUPPORT
I.1290	LED TRANS. AZUL SIN CROMAR	CHROMED WITHOUT BLUE LED
I.1291	INTERRUPTOR ON/OFF SERIGRAFIA	CHROMED WITHOUT BLUE LED
I.1311	TAPON BLANCO FRONTAL BASIC ONE	WHITE MEMBRANE ON/OFF SWITCH
I.2241	MIRILLA PILOTO BASIC	BASIC LED FITTING
I.2242	PILOTO AZÚL 120V STEEL/BAR/BASIC	BLUE PILOT 120V STEEL/BAR/BASIC
MI...7	BOTON PULSADOR	PUSH-BUTTON
MI.123	PULSADOR	PUSH-BUTTON
PM..82	PATA BASIC	BASIC FOOT

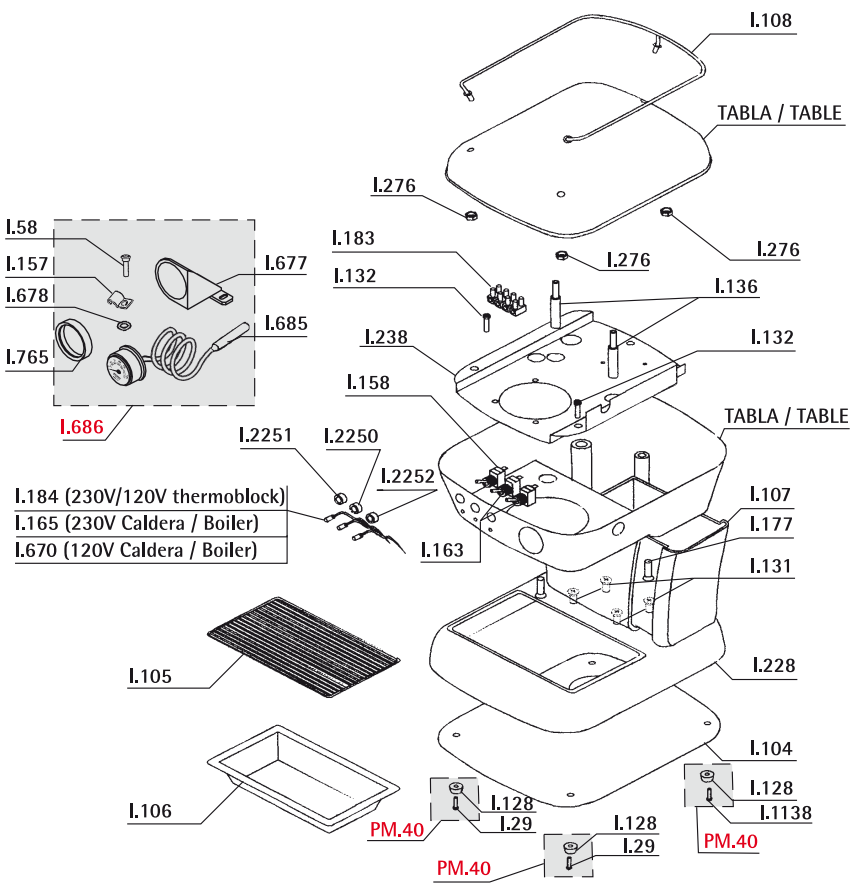

	Azul Blue	Amarilla Yellow	Verde Green	Roja Red	Antracita Anthracite	Naranja Orange	Negra Black	Pulida Polish	Crema Cream	Celeste Light blue	Rosa Rose	Vaca Cow	Blanca White	Chocolate Chocolat
Tapa/Lid	I.201	I.202	I.203	I.204	I.205	I.206	I.207	I.208	I.209	I.341	I.343	I.367	I.370	I.2203
Cuerpo/Body	I.211	I.212	I.213	I.214	I.215	I.216	I.217	I.218	I.219	I.340	I.342	I.368	I.371	I.2202

Ref.	Descripción	Description
I...58	TORNILLO BRIDA FUSIBLE	SCREW
I..104	BASE FONDO DREAM	DREAM BASE
I..105	REJILLA DREAM	DREAM GRID
I..106	BANDEJA DREAM INOX	INOX DREAM TRAY
I..107	DEPOSITO DREAM	DREAM WATER TANK
I..108	BARANDILLA DREAM	DREAM BANISTER
I..128	PIE GOMA	RUBBER FOOT
I..131	TORNILLO FIJ. CUERPO DREAM	SCREW
I..132	TORNILLO FIJ. BASE MECAN.DREAM	DREAM FIXATION SCREW
I..136	UNION TAPA DREAM	DREAM LID UNION
I..157	MUELLE FIJ. FUSIBLE P.F	SPRING
I..158	INTERRUPTOR DREAM BIPOLAR ON-ON	DREAM ON-ON BIP.SWITCH
I..163	INTERRUPTOR DREAM ON-OFF	DREAM ON-OFF SWITCH
I..165	PILOTO	WARNING LAMP
I..177	TORNILLO TAPA DREAM INOX	INOX DREAM LID SCREW
I..183	REGLETA 4 VIAS	4 WAYS CONNECTOR
I..184	PILOTO DREAM P.F	DREAM LAMP
I..201	TAPA DREAM AZUL	BLUE DREAM LID
I..202	TAPA DREAM AMARILLA	YELLOW DREAM LID
I..203	TAPA DREAM VERDE	GREEN DREAM LID
I..204	TAPA DREAM ROJA	RED DREAM LID
I..205	TAPA DREAM ANTRACITA	GREY DREAM LID
I..206	TAPA DREAM NARANJA	ORANGE DREAM LID
I..207	TAPA DREAM NEGRA	DREAM BLACK LID
I..208	TAPA DREAM PULIDA	POLISH DREAM LID
I..209	TAPA DREAM CREMA	CREAM DREAM LID
I..211	CUERPO DREAM AZUL	BLUE DREAM BODY
I..212	CUERPO DREAM AMARILLO	YELLOW DREAM BODY
I..213	CUERPO DREAM VERDE	GREEN DREAM BODY
I..214	CUERPO DREAM ROJO	RED DREAM BODY
I..215	CUERPO DREAM ANTRACITA	GREY DREAM BODY
I..216	CUERPO DREAM NARANJA	ORANGE DREAM BODY
I..217	CUERPO DREAM NEGRO	BLACK DREAM BODY
I..218	CUERPO DREAM PULIDO	POLISH DREAM BODY
I..219	CUERPO DREAM CREMA	CREAM DREAM BODY
I..228	BASE DREAM PULIDA	POLISH DREAM BASE
I..238	CHAPA GRUPO DREAM	DREAM GROUP PLATE
I..276	TUERCA M8	M8 NUT
I..340	CUERPO DREAM CELESTE	KID BLUE BODY DREAM
I..341	TAPA DREAM CELESTE	BLUELIGHT DREAM LID
I..342	CUERPO DREAM ROSA	PINK DREAM BODY
I..343	TAPA DREAM ROSA	PINK DREAM LID
I..367	TAPA DREAM VACA	COW DREAM LID
I..370	TAPA DREAM BLANCA NIEVE	WHITE LID DREAM
I..368	CUERPO DREAM VACA	COW BODY DREAM
I..371	CUERPO DREAM BLANCO	WHITE DREAM BODY
I..670	PILOTO DREAM PM 110V	110V DREAM FM LAMP
I..677	SOPORTE TERMOMETRO	THERMOMETER SUPPORT
I..678	ARANDELA DIN9021 M5 ZINCADA	WASHER
I..685	TERMOMETRO DREAM	DREAM THERMOMETRE
I..686	TERMOMETRO DREAM CPTO	DREAM ASSEMBLED THERMOMETER
I..765	ANILLO TERMOMETRO	THERMOMETER RING
I.1138	TORNILLO M5X15 INOX	M5X15 INOX SCREW
I.2202	TORICA	RUBBER RING
I.2203	TAPA FREAM CHOCOLATE	CHOCOLAT FREAM LID
I.2250	TUERCA INTERRUPTOR DREAM ON/OFF	DREAM ON/OFF SWITCH NUT
I.2251	TUERCA INTERRUPTOR DREAM COFFEE	COFFEE DREAM SWITCH NUT
I.2252	TUERCA INTERRUPTOR DREAM STEAM	STEAM DREAM SWITCH NUT
PM..40	CONJUNTO PATA DREAM	DREAM FOOT WHOLE

ASCASO
ascaso

373 Carrocería Arc ■ Arc Bodywork

Ref.	Descripción	Description
I..118	PASACABLE	WIRINGPIN
I..121	REJILLA ARC	ARC GRID
I..122	BANDEJA ARC	ARC DRAIN TRAY
I..123	DEPOSITO ARC	ARC WATER TANK
I..124	BARANDILLA ARC	ARC BANISTER
I..128	PIE GOMA	RUBBER FOOT
I..146	SOPORTE PLACA ELECTRONICA	CONTROL BOARD SUPPORT
I..160	INT. UNIPOLAR ON-OFF S/SERIGRAFIA	ON-OFF SWITCH
I..161	INTERRUPTOR BIPOLAR ON-ON	BIP- ON-ON SWITCH
I..162	INTERRUPTOR UNIPOLAR ON-ON	ON-ON SWITCH
I..165	PILOTO	WARNING LAMP
I..166	PILOTO ARC/ELIPSE	ARC/ELIPSE WARNING LAMP
I..197	PULSADOR VAPOR ARC	ARC STEAM PUSH BUTTOM
I..251	CARROCERIA ARC NEGRA	BLACK ARC BODYWORK
I..261	FRONTAL INTERM.ARC	ARC INTERMEDIATE FRONT
I..262	BASE DEPOSITO	TANK BASE
I..263	TAPA SUPERIOR ARC	ARC UPPER LID
I..282	TORNILLO TAPA ARC	ARC LID SCREW
I..310	FRONTAL ARC CROMADO	CHROMED ARC FRONT
I..312	FRONTAL ARC NEGRO	BLACK ARC FRONT
I..375	SOPORTE INTERRUPTOR ON/OFF ARC	ARC ON/OFF SWITCH SUPPORT
I..377	SOPORTE INTERRUPTOR COFFEE	COFFEE SWICTH SUPPORT
I..378	SOPORTE INTERRUPTOR STEAM	STEAM SWICTH SUPPORT
I..422	TUERCA+ARANDELA	WASHER+NUT
I..471	INTERRUPTOR UNIPOLAR	ONE POLE SWICTH
I..472	INTERRUPTOR UNIPOLAR CONMUTADO	6 FASTON ONE POLE SWICTH
I..474	INTERRUPTOR BIPOLAR CONMUTADO	6 FASTON TWO POLES SWITCH
I..490	PILOTO ARC/ELIPSE 110V	110V ARC/ELIPSE PILOT
I..617	BANDEJA ARC ROJA	RED ARC TRAY
I..618	BANDEJA ARC AMARILLA PASTEL	CREAM YELLOW ARC TRAY
I..619	BANDEJA ARC ROSA	PINK ARC TRAY
I..620	BANDEJA ARC CELESTE	LIGHT BLUE ARC TRAY
I.1064	REJILLA BASIC MOKADOR	BASIC MOKADOR DRIP TRAY
MI...7	BOTON PULSADOR	PUSH-BUTTON
MI..27	INTERRUPTOR	SWITCH
MI..62	ARANDELA	WASHER
PM..41	CONJUNTO PATA ARC/ELIPSE	ARC/ELIPSE FOOT WHOLE

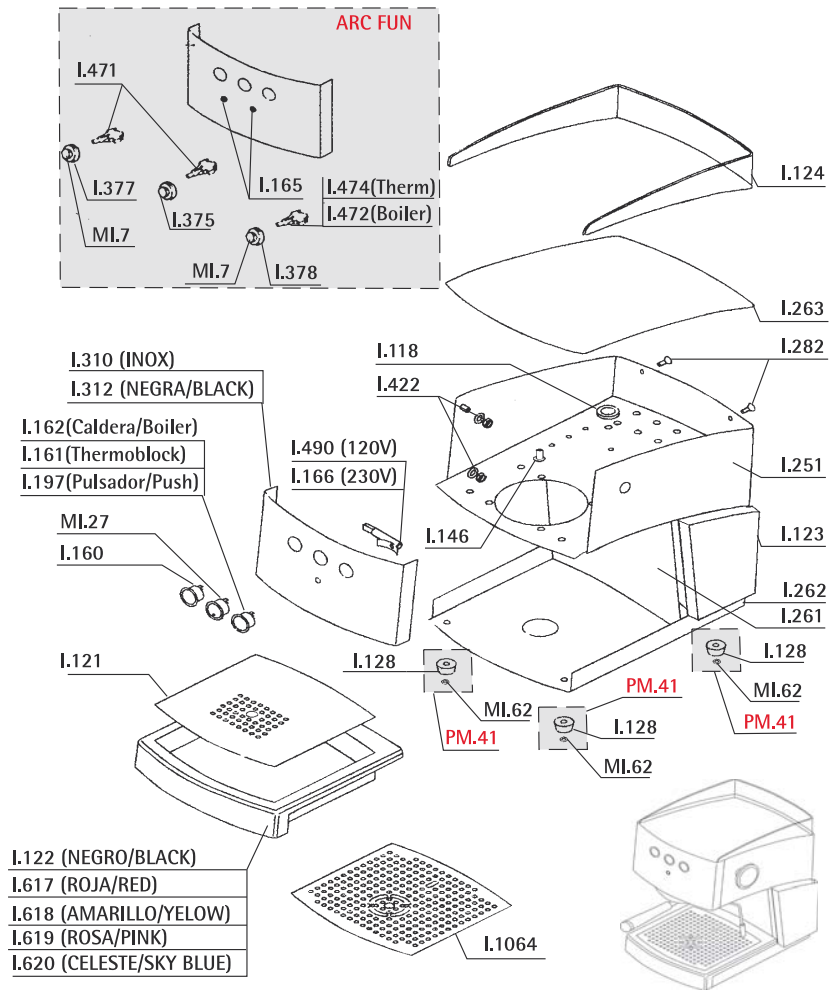

374 Carrocería Elipse ■ Elipse Bodywork

Ref.	Descripción	Description
I..113	REJILLA ELIPSE	ELIPSE GRID
I..114	BANDEJA ELIPSE	ELIPSE DRAIN TRAY
I..117	TOPE DEPOSITO ELIPSE	ELIPSE TANK STOP
I..118	PASACABLE	WIRINGPIN
I..119	PASACABLES CAJA TER.ELECT	WIRINGPIN
I..128	PIE GOMA	RUBBER FOOT
I..146	SOPORTE TERMOSTATO	THERMOSTAT SUPPORT
I..160	INT. UNIPOLAR ON-OFF S/SERIGRAFIA	ON-OFF SWITCH
I..161	INTERRUPTOR BIPOLAR ON-ON	BIP- ON-ON SWITCH
I..162	INTERRUPTOR UNIPOLAR ON-ON	ON-ON SWITCH
I..166	PILOTO ARC/ELIPSE 230V	230V ARC/ELIPSE PILOT
I..191	TORNILLO TAPA ELIPSE	SCREW
I..193	FRONTAL INF. ELIPSE PULIDO	POLISH ELIPSE LOWER FRONT
I..195	FRONTAL INF. ELIPSE NEGRO	BLACK LOWER ELIPSE FRONT
I..197	PULSADOR VAPOR ARC	STEAM PUSH BUTTOM
I..231	TAPA SUPERIOR ELIPSE	UPPER ELIPSE LID
I..232	FRONTAL INTERM. ELIPSE	ELIPSE MIDDLE FRONT
I..234	TAPA DEPOSITO ELIPSE	ELIPSE TANK LID
I..236	CAJA PLACA IMPULSO	CIRCUIT BOX
I..241	CARROCERIA ELIPSE NEGRA	BLACK ELIPSE BODYWORK
I..272	POMO TAPA DEPOSITO	LID TANK HANDLE
I..275	TORNILLO	SCREW
I..306	FRONTAL SUPERIOR ELIPSE PULIDO	ELIPSE POLISHED UPPER FRONT
I..308	FRONTAL SUPERIOR ELIPSE NEGRO	ELIPSE BLACK UPPER FRONT
I..334	DEPOSITO ELIPSE	ELIPSE TANK
I..490	PILOTO ARC/ELIPSE 110V	110V ARC/ELIPSE PILOT
MI..27	INTERRUPTOR	SWITCH
MI..57	TORNILLO	SCREW
MI..62	ARANDELA	WASHER
PM..41	CONJUNTO PATA ARC/ELIPSE	ARC/ELIPSE FOOT WHOLE

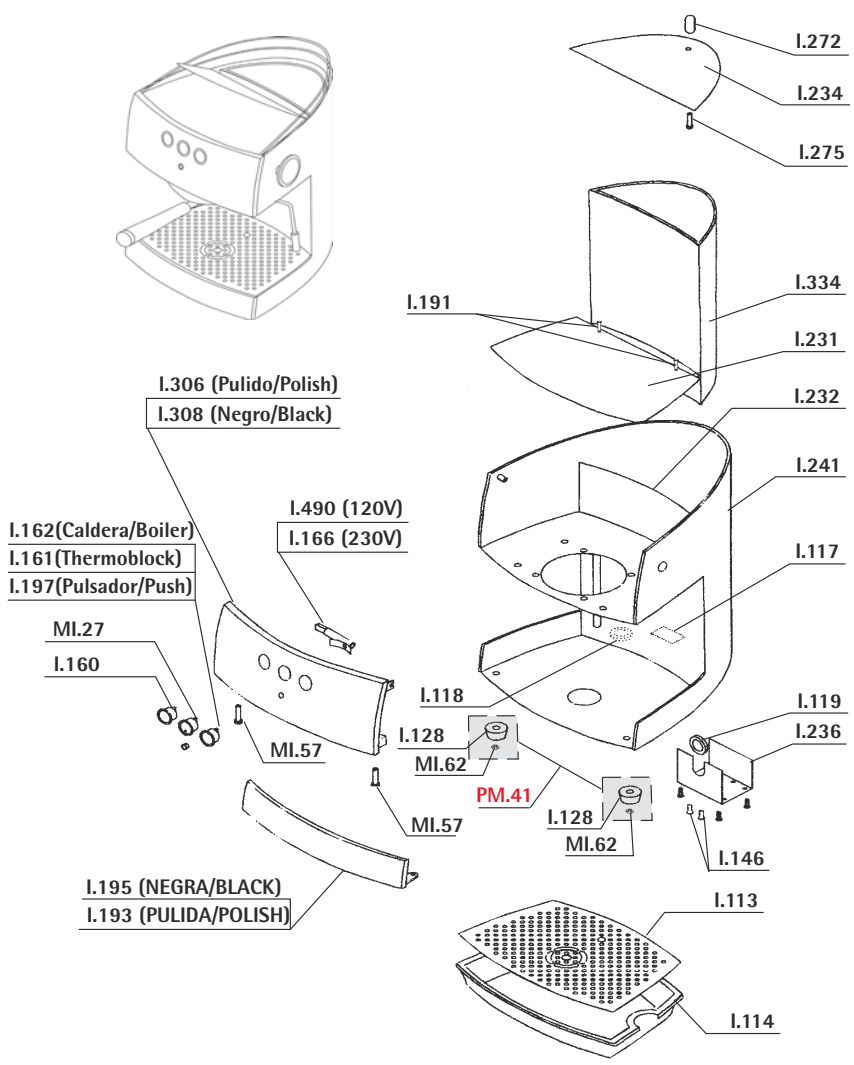

ALTA CALIDAD GARANTIZADA ascaso desde 1962

GARANTÍA TOTAL

ascaso ofrece garantía de seriedad en el servicio y primera calidad en todos los artículos.

Grupo Thermoblock Arc Basic -11/2008 ■ Arc Basic Thermoblock Group -11/2008

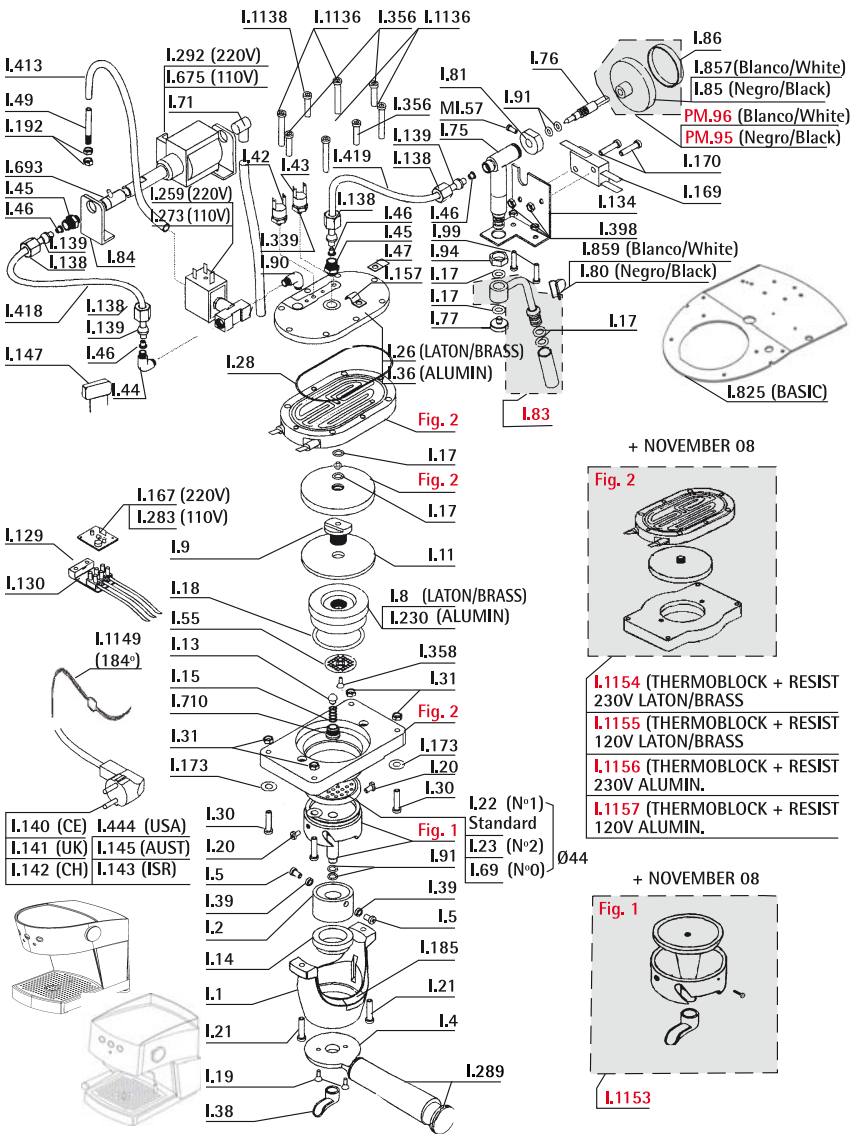

Ref.	Descripción	Description
I....1	BASE PORTA FIJO	FIXED FILTERHOLDER BASE
I....2	VASTAGO	BRASS ROD
I....4	SOPORTE MANGO	HANDLE SUPPORT
I....5	PIVOTE LEVA	BRASS LEVER PIVOT
I....8	EMBOLO LATON	BRASS PISTON
I....9	CUERPO VALVULA RETENCION	RETENTION VALVE BODY
I...11	MEMBRANA SILICONA	SILICONE MEMBRANE
I...13	VALVULA SILICONA INTERC.	SILICONE VALVE
I...14	CASQUILLO RODADURA	CAP
I...15	MUELLE VALVULA RETENCION	RETENTION VALVE SPRING
I...17	TORICA UNION INTERCAMB. SILICONA	SILICONE RING
I...18	JUNTA TORICA CIALDA	RING
I...19	TORNILLO APRIETE SOPORTE MANGO	SCREW
I...20	TORNILLO GUIA	GUIDE SCREW
I...21	TORNILLO INOX APRIETE P.F	INOX SCREW
I...22	FILTRO CIALDA Nº1	Nº1 POD FILTER
I...23	FILTRO CIALDA Nº2	Nº2 POD FILTER
I...26	TAPA INTERCAMBIADOR LATON	BRASS EXCHANGER LID
I...28	TORICA INTERCAMB. SILIC.	SILICONE RING
I...30	TORNILLO FIJACION INTERCAMB.	SCREW
I...31	TUERCA FIJACION INTERCAMB.	NUT
I...36	TAPA INTERCAMB. ALUMINIO	ALUMINIUM EXCHANGER LID
I...38	SALIDA 1 CAFE LATON	BRASS 1 COFFEE SPOUT
I...39	RODILLO LEVA	LEVER ROLLER
I...42	TERMOSTATO 95º	95º THERMOSTAT
I...43	TERMOSTATO 140º	140º THERMOSTAT
I...44	RACOR CODO	ELBOW FITTING
I...45	RACOR RECTO	STRAIGHT FITTING
I...46	REFUERZO TUBO	PIPE REINFORCEMET
I...47	TERMINAL MASA	TERMINALE
I...49	TUBO CHIMENEA	PIPE
I...55	DUCHA	SHOWERR
I...69	FILTRO CIALDA Nº0	Nº0 FILTER
I...71	PIPETA ASPIRACION	SUCTION FITTING
I...75	GRIFO VAPOR/AGUA	STEAM/WATER TAP
I...76	EJE GRIFO	TAP ROD
I...77	FIJACION TUBO VAPOR	PIPE STEAM FIXATION
I...80	PROTECTOR TUBO VAPOR	STEAM PIPE PROTECTOR
I...81	LEVA ACCIONAMIENTO	LEVER
I...83	TUBO VAPOR CORTO	SHORT STEAM PIPE
I...84	SOPORTE BOMBA 90º	90º PUMP SUPPORT
I...85	POMO GRIFO	TAP HANDLE
I...86	EMBELLECEDOR POMO INOX	INOX HANDLE LID
I...90	RACOR CODO	ELBOW FITTING
I...91	JUNTA TORICA EJE	SILICONE RING
I...94	TUERCA APRIETE GRIFO	TAP NUT
I...99	TORNILLO SOPORTE GRIFO INOX	TAP SUPPORT INOX SCREW
I..129	RETENEDOR CABLE	WIRING TERMINAL
I..130	REGLETA 3 VIAS	3 WAYS CONNECTOR
I..134	SOPORTE GRIFO	TAP SUPPORT
I..138	TUERCA BICONO	BICONE NUT
I..139	BICONO 6 mm	BICONE
I..140	CABLE RED	ELECTRIC WIRING
I..141	CABLE RED UK	UK WIRING
I..142	CABLE RED SUIZA	SWITZERLAND WIRING
I..143	CABLE RED ISRAEL	ISRAEL WIRING
I..145	CABLE RED AUSTRALIA	AUSTRALIAN WIRING
I..147	CONDENSADOR	CONDENSER
I..157	MUELLE FIJACION FUSIBLE P.F	SPRING
I..167	PLACA IMPULSO BOMBA 230V	PUMP CIRCUIT
I..169	MICRO PALANCA	LEVER MICROSWITCH
I..170	TORNILLO FIJACION MICRO	MICRO FIXATION SCREW
I..173	JUNTA GRUPO INT. TEFLON	TEFLON GASKET
I..185	PROTECTOR PORTA FIJO	FIXED HOLDER PROTECTOR
I..192	TUERCA LATON	BRASS NUT
I..230	EMBOLO CON DUCHA	PISTON WITH SHOWER
I..259	ELECTROVALVULA PASO 1.5 220V	3 WAY SOLENOID
I..273	ELECTROVALVULA 3 VIAS 110V	110V 3 WAYS SOLENOID
I..283	PLACA IMPULSOS BOMBA 110V	110V PUMP CIRCUIT
I..289	CONJUNTO MANGO	HANDLE WHOLE
I..292	BOMBA ULKA EP-5 230V PLASTICO	ULKA EP-5 230V PUMP
I..339	TERMOSTATO 98º	98º THERMOSTAT
I..356	TORNILLO ALLEN	SCREW
I..358	TORNILLO PORTADUCHA INOX	INOX SCREW
I..398	TUERCA AUTOBLOCANTE M-3	M-3 AUTOBLOC NUT
I..413	TUBO SILICONA 5 X 8 (205MM)	SILICONE PIPE 5 X 8 (205MM)
I..418	TUBO TEFLON 4 X 6 (73MM)	TEFLON PIPE 4 X 6 (73MM)
I..419	TUBO TEFLON 4x6 (115 mm)	TEFLON PIPE 4x6 (115 mm)
I..444	CABLE RED USA	USA WIRING
I..675	BOMBA 110V 52W PLASTICO	110V 52W PLASTIC PUMP
I..693	VALVULA S-2 REFORZADA	S-2 REINFORCED VALVE
I..710	TUERCA VALVULA RETENCION CAPS	NUT
I..825	CHAPA MECANISMO BASIC	BASIC MECHANISME PLATE
I..857	POMO GRIFO BLANCO	WHITE HANDLE TAP
I..859	PROTECTOR TUBO VAPOR BLANCO	STEAM PIPE WHITE PROTECTOR
I.1136	TORNILLO ALLEN M5X35 INOX	ALLEN SCREW M5X35 INOX
I.1138	TORNILLO DIN 7985 M5X15 INOX	SCREW DIN 7985 M5X15 INOX
I.1149	CABLE FUSIBLE ARC/BASIC PF	ARC/BASIC PF FUSE WIRING
I.1153	CONJUNTO EMBUDO + SALIDA CAFE	FUNNEL WHOLE + COFFEE OUTLET
I.1154	CONJUNTO THERM. LATON + RES. 230V	BRASS. THERM + RESIST. 230V
I.1155	CONJUNTO THERM. LATON + RES. 120V	BRASS. THERM + RESIST. 120V
I.1156	CONJUNTO THERM. ALUMINIO + RES 230V	ALUMIN. THERM + RESIST. 230V
I.1157	CONJUNTO THERM. ALUMINIO + RES 120V	ALUMIN.THERM + RESIST. 120V
MI..57	TORNILLO	SCREW
PM..95	CONJUNTO POMO NEGRO	BLACK HANDLE WHOLE
PM..96	CONJUNTO POMO BLANCO	WHITE HANDLE WHOLE

Grupo Thermoblock Dream -11/2008 ■ Dream Thermoblock Group -11/2008

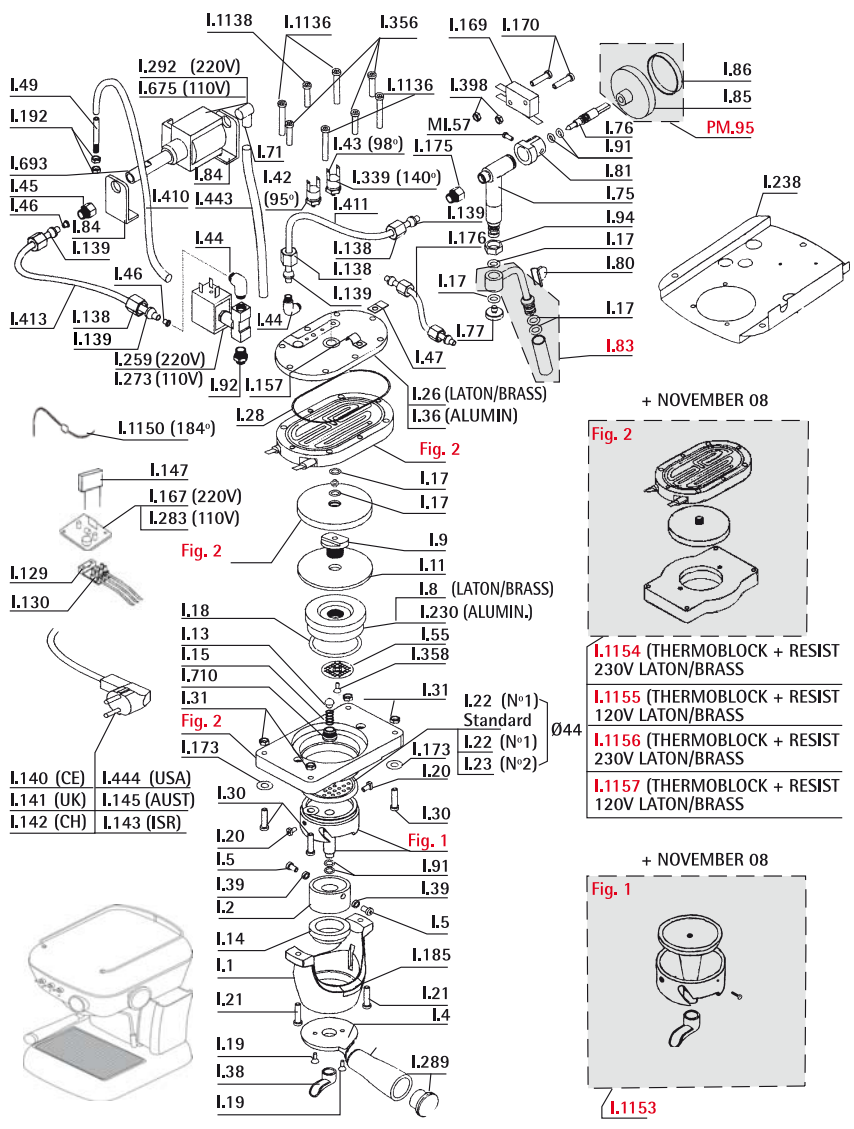

Ref.	Descripción	Description
I....1	BASE PORTA FIJO	FIXED FILTERHOLDER BASE
I....2	VASTAGO	BRASS ROD
I....4	SOPORTE MANGO	HANDLE SUPPORT
I....5	PIVOTE LEVA	BRASS LEVER PIVOT
I....8	EMBOLO LATON	BRASS PISTON
I....9	CUERPO VALVULA RETENCION	RETENTION VALVE BODY
I...11	MEMBRANA SILICONA	SILICONE MEMBRANE
I...13	VALVULA SILICONA INTERC.	SILICONE VALVE
I...14	CASQUILLO RODADURA	CAP
I...15	MUELLE VALVULA RETENCION	RETENTION VALVE SPRING
I...17	TORICA UNION INTERCAMB. SILICONA	SILICONE RING
I...18	JUNTA TORICA CIALDA	RING
I...19	TORNILLO APRIETE SOPORTE MANGO	SCREW
I...20	TORNILLO GUIA	GUIDE SCREW
I...21	TORNILLO INOX APRIETE P.F	INOX SCREW
I...22	FILTRO CIALDA Nº1	Nº1 POD FILTER
I...23	FILTRO CIALDA Nº2	Nº2 POD FILTER
I...26	TAPA INTERCAMBIADOR LATON	BRASS EXCHANGER LID
I...28	TORICA INTERCAMB. SILICONA	SILICONE RING
I...30	TORNILLO FIJACION INTERCAMB.	SCREW
I...31	TUERCA FIJACION INTERCAMB	NUT
I...36	TAPA INTERCAMB.ALUMINIO	ALUMINIUM EXCHANGER LID
I...38	SALIDA 1 CAFE LATON	BRASS 1 COFFEE SPOUT
I...39	RODILLO LEVA	LEVER ROLLER
I...42	TERMOSTATO 95º	95º THERMOSTAT
I...43	TERMOSTATO 140º	140º THERMOSTAT
I...44	RACOR CODO	ELBOW FITTING
I...45	RACOR RECTO	STRAIGHT FITTING
I...46	REFUERZO TUBO	PIPE REINFORCEMET
I...47	TERMINAL MASA	TERMINALE
I...49	TUBO CHIMENEA	PIPE
I...55	DUCHA	SHOWER
I...71	PIPETA ASPIRACION	SUCTION FITTING
I...75	GRIFO VAPOR/AGUA	STEAM/WATER TAP
I...76	EJE GRIFO	TAP ROD
I...77	FIJACION TUBO VAPOR	PIPE STEAM FIXATION
I...80	PROTECTOR TUBO VAPOR	STEAM PIPE PROTECTOR
I...81	LEVA ACCIONAMIENTO	LEVER
I...83	TUBO VAPOR CORTO	SHORT STEAM PIPE
I...84	SOPORTE BOMBA 90º	90º PUMP SUPPORT
I...85	POMO GRIFO	TAP HANDLE
I...86	EMBELLECEDOR POMO INOX	INOX HANLE LID
I...91	JUNTA TORICA EJE	SILICONE RING
I...92	MACHON	FITTING MALE
I...94	TUERCA APRIETE GRIFO	TAP NUT
I..129	RETENEDOR CABLE	WIRING TERMINAL
I..130	REGLETA 3 VIAS	3 WAYS CONNECTOR
I..138	TUERCA BICONO	BICONE NUT
I..139	BICONO 6 mm	BICONE
I..140	CABLE RED	ELECTRIC WIRING
I..141	CABLE RED UK	UK WIRING
I..142	CABLE RED SUIZA	SWITZERLAND WIRING
I..143	CABLE RED ISRAEL	ISRAEL WIRING
I..145	CABLE RED AUSTRALIA	AUSTRALIAN WIRING
I..147	CONDENSADOR	CONDENSER
I..157	MUELLE FIJACION FUSIBLE P.F	SPRING
I..167	PLACA IMPULSO BOMBA 230V	PUMP CIRCUIT
I..169	MICRO PALANCA	LEVER MICROSWITCH
I..170	TORNILLO FIJACION MICRO	MICRO FIXATION SCREW
I..173	JUNTA GRUPO INT. TEFLON	TEFLON GASKET
I..175	RACOR RECTO	STRAIGHT FITTING
I..176	TUBO TEFLON 4x2mm	4x2mm TEFLON PIPE
I..185	PROTECTOR PORTA FIJO	FIXED HOLDER PROTECTOR
I..192	TUERCA LATON	BRASS NUT
I..230	EMBOLO CON DUCHA	PISTON WITH SHOWER
I..238	CHAPA GRUPO DREAM	DREAM GROUP PLATE
I..259	ELECTROVALVULA PASO 1.5 220V	220V 3 WAY SOLENOID
I..273	ELECTROVALVULA 3 VIAS 110V	110V 3 WAYS SOLENOID
I..283	PLACA IMPULSOS BOMBA 110V	110V PUMP CIRCUIT
I..289	CONJUNTO MANGO	HANDLE WHOLE
I..292	BOMBA ULKA EP-5 230V PLASTICO	ULKA EP-5 230V PUMP
I..339	TERMOSTATO 98º	98º THERMOSTAT
I..356	TORNILLO ALLEN	SCREW
I..358	TORNILLO PORTADUCHA INOX	INOX SCREW
I..398	TUERCA AUTOBLOCANTE M-3	M-3 AUTOBLOC NUT
I..410	TUBO TEFLON 4 X 6 (85MM)	TEFLON PIPE 4 X 6 (85MM)
I..411	TUBO TEFLON 4 X 6 (135MM)	TEFLON PIPE 4 X 6 (135MM)
I..413	TUBO SILICONA 5 X 8 (205MM)	SILICONE PIPE 5 X 8 (205MM)
I..443	TUBO SILICONA 4x7 (90mm)	SILICONE PIPE 4x7 (90mm)
I..444	CABLE RED USA	USA WIRING
I..675	BOMBA 110V 52W PLASTICO	110V 52W PLASTIC PUMP
I..693	VALVULA S-2 REFORZADA	S-2 REINFORCED VALVE
I..710	TUERCA VALVULA RETENCION CAPS	NUT
I.1136	TORNILLO ALLEN M5X35 INOX	ALLEN SCREW M5X35 INOX
I.1138	TORNILLO DIN 7985 M5X15 INOX	SCREW DIN 7985 M5X15 INOX
I.1150	CABLE FUSIBLE DREAM	DREAM FUSE WIRING
I.1153	CONJUNTO EMBUDO + SALIDA CAFE	FUNNEL CONJUNT + COFFEE OUTLET
I.1154	CONJUNTO THERM. LATON + RES. 230V	BRASS.THERM + RESIST. 230V
I.1155	CONJUNTO THERM. LATON + RES. 120V	BRASS THERM + RESIST. 120V
I.1156	CONJUNTO THERM. ALUMINIO + RES 230V	ALUMIN. THERM + RESIST 230V
I.1157	CONJUNTO THERM. ALUMINIO + RES 120V	ALUMIN.THERM + RESIST 120V
K..133	MANGUERA DE RED 220V	220V ELECTRIC WIRING
MI..57	TORNILLO	SCREW
PM..95	CONJUNTO POMO NEGRO	BLACK HANDLE WHOLE

ASCASO

377 Grupo Thermoblock Elipse -11/2008 ■ Elipse Thermoblock Group -11/2008

Ref.	Descripción	Description
I....1	BASE PORTA FIJO	FIXED FILTERHOLDER BASE
I....2	VASTAGO	BRASS ROD
I....4	SOPORTE MANGO	HANDLE SUPPORT
I....5	PIVOTE LEVA	BRASS LEVER PIVOT
I....8	EMBOLO LATON	BRASS PISTON
I....9	CUERPO VALVULA RETENCION	RETENTION VALVE BODY
I...11	MEMBRANA SILICONA	SILICONE MEMBRANE
I...13	VALVULA SILICONA INTERC.	SILICONE VALVE
I...14	CASQUILLO RODADURA	CAP
I...15	MUELLE VALVULA RETENCION	RETENTION VALVE SPRING
I...17	TORICA UNION INTERCAMB. SILICONA	SILICONE RING
I...18	JUNTA TORICA CIALDA	RING
I...19	TORNILLO APRIETE SOPORTE MANGO	SCREW
I...20	TORNILLO GUIA	GUIDE SCREW
I...21	TORNILLO INOX APRIETE P.F	INOX SCREW
I...22	FILTRO CIALDA Nº1	Nº1 POD FILTER
I...23	FILTRO CIALDA Nº2	Nº2 POD FILTER
I...26	TAPA INTERCAMBIADOR LATON	BRASS EXCHANGER LID
I...28	TORICA INTERCAMB. SILICONA	SILICONE RING
I...30	TORNILLO FIJACION INTERCAMB.	SCREW
I...31	TUERCA FIJACION INTERCAMB.	NUT
I...36	TAPA INTERCAMB. ALUMINIO	ALUMINIUM EXCHANGER LID
I...38	SALIDA 1 CAFE LATON	BRASS 1 COFFEE SPOUT
I...39	RODILLO LEVA	LEVER ROLLER
I...42	TERMOSTATO 95º	95º THERMOSTAT
I...43	TERMOSTATO 140º	140º THERMOSTAT
I...44	RACOR CODO	ELBOW FITTING
I...46	REFUERZO TUBO	PIPE REINFORCEMET
I...47	TERMINAL MASA	TERMINALE
I...55	DUCHA	SHOWER
I...71	PIPETA ASPIRACION	SUCTION FITTING
I...75	GRIFO VAPOR/AGUA	STEAM/WATER TAP
I...76	EJE GRIFO	TAP ROD
I...77	FIJACION TUBO VAPOR	PIPE STEAM FIXATION
I...80	PROTECTOR TUBO VAPOR	STEAM PIPE PROTECTOR
I...81	LEVA ACCIONAMIENTO	LEVER
I...83	TUBO VAPOR CORTO	SHORT STEAM PIPE
I...84	SOPORTE BOMBA 90º	90º PUMP SUPPORT
I...85	POMO GRIFO	TAP HANDLE
I...86	EMBELLECEDOR POMO INOX	INOX HANLE LID
I...89	MUELLE POMO	HANDLE SPRING
I...91	JUNTA TORICA EJE	SILICONE RING
I...92	MACHON	MALE
I...94	TUERCA APRIETE GRIFO	TAP NUT
I...99	TORNILLO SOPORTE GRIFO INOX	TAP SUPPORT INOX SCREW
I..129	RETENEDOR CABLE	WIRING TERMINAL
I..130	REGLETA 3 VIAS	3 WAYS CONNECTOR
I..134	SOPORTE GRIFO	TAP SUPPORT
I..138	TUERCA BICONO	BICONE NUT
I..139	BICONO 6 mm	BICONE
I..140	CABLE RED	ELECTRIC WIRING
I..141	CABLE RED UK	UK WIRING
I..142	CABLE RED SUIZA	SWITZERLAND WIRING
I..143	CABLE RED ISRAEL	ISRAEL WIRING
I..145	CABLE RED AUSTRALIA	AUSTRALIAN WIRING
I..157	MUELLE FIJACION FUSIBLE P.F	SPRING
I..167	PLACA IMPULSO BOMBA 230V	PUMP CIRCUIT
I..169	MICRO PALANCA	LEVER MICROSWITCH
I..170	TORNILLO FIJACION MICRO	MICRO FIXATION SCREW
I..173	JUNTA GRUPO INT. TEFLON	TEFLON GASKET
I..185	PROTECTOR PORTA FIJO	FIXED HOLDER PROTECTOR
I..230	EMBOLO CON DUCHA	PISTON WITH SHOWER
I..259	ELECTROVALVULA 3 VIAS 230V 1/8" x 1/8"	1/8" x 1/8" 230V 3 WAYS SOLENOID
I..273	ELECTROVALVULA 3 VIAS 110V	110V 3 WAYS SOLENOID
I..283	PLACA IMPULSOS BOMBA 110V	110V PUMP CIRCUIT
I..289	CONJUNTO MANGO	HANDLE WHOLE
I..292	BOMBA ULKA EP-5 230V PLASTICO	ULKA EP-5 230V PUMP
I..339	TERMOSTATO 98º	98º THERMOSTAT
I..356	TORNILLO ALLEN	SCREW
I..358	TORNILLO PORTADUCHA INOX	INOX SCREW
I..398	TUERCA AUTOBLOCANTE M-3	M-3 AUTOBLOC NUT
I..410	TUBO TEFLON 4x6 (85MM)	TEFLON PIPE 4x6 (85MM)
I..424	TUBO TEFLON 4x6 (56mm)	TEFLON PIPE 4x6 (56mm)
I..426	TUBO SILICONA 5x8 (370mm)	SILICONE PIPE 5x8 (370mm)
I..443	TUBO SILICONA 4x7 (90mm)	SILICONE PIPE 4x7 (90mm)
I..444	CABLE RED USA	USA WIRING
I..445	FILTRO RESINA	RESIN FILTER
I..675	BOMBA 110V 52W PLASTICO	110V 52W PLASTIC PUMP
I..693	VALVULA S-2 REFORZADA	S-2 REINFORCED VALVE
I..710	TUERCA VALVULA RETENCION CAPS	NUT
I..723	TORNILLO DIN 7985 M3x5 ZN	SCREW DIN 7985 M3x5 ZN
I.1136	TORNILLO ALLEN M5x35 INOX	ALLEN SCREW M5x35 INOX
I.1138	TORNILLO DIN 7985 M5x15 INOX	SCREW DIN 7985 M5x15 INOX
I.1153	CONJUNTO EMBUDO + SALIDA CFE + LEVA	LEVER + O.COFFEE + FUNNEL WHOLE
I.1154	CONJUNTO THERM. LATON + RES. 230V	BRASS THERM. + RESIST. 230V
I.1155	CONJUNTO THERM. LATON + RES. 120V	BRASS THERM. + RESIST. 120V
I.1156	CONJUNTO THERM. ALUMINIO + RES 230V	ALUMIN. THERM. + RESIST 230V
I.1157	CONJUNTO THERM. ALUMINIO + RES 120V	ALUMIN.THERM. + RESIST 120V
I.1231	CABLE FUSIBLE ELIPSE PF	ELIPSE PF FUSE WIRING
PM..95	CONJUNTO POMO NEGRO	BLACK HANDLE WHOLE

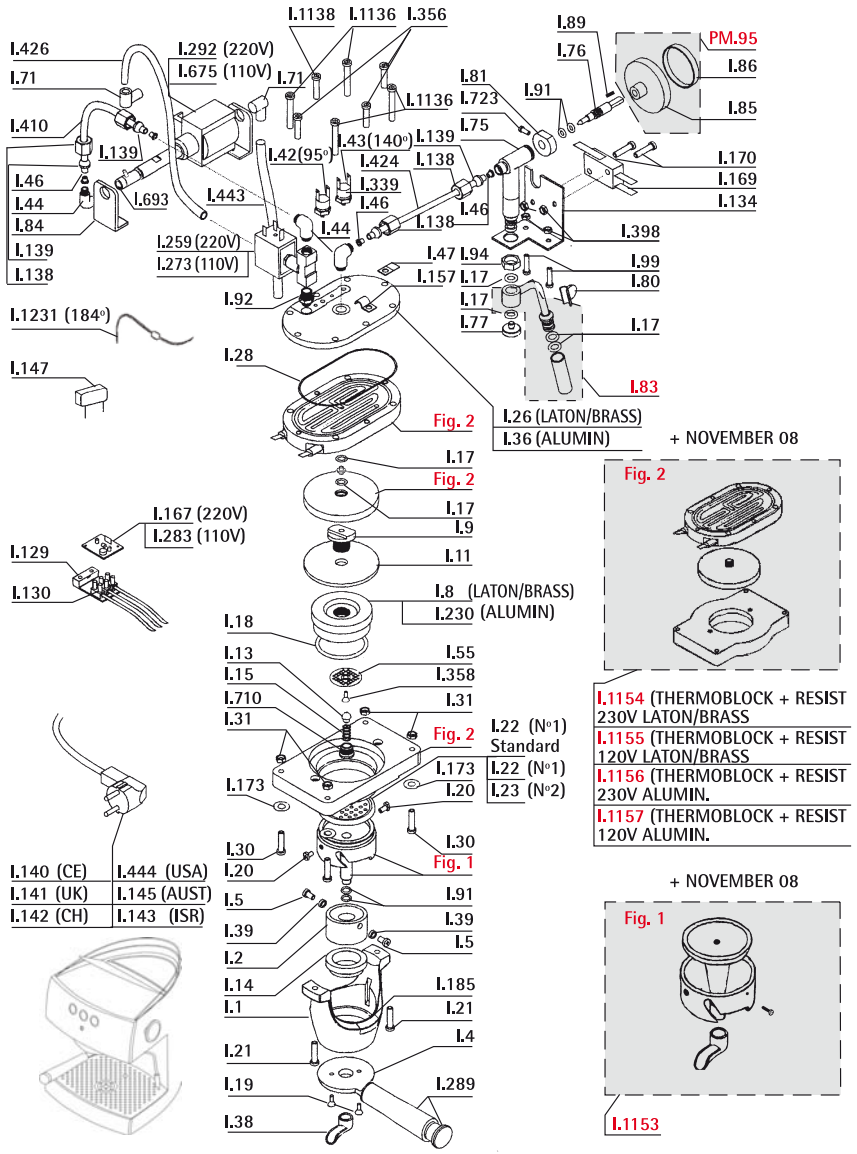

378 Grupo Thermoblock Arc Basic +11/2008 ■ Arc Basic Thermoblock Group +11/2008

Ref.	Descripción	Description
ESC..1	CONJUNTO INTER. LATON ARC/ELIPSE	ARC/ELIPSE BRASS INTER.WHOLE
ESC..2	CONJUNTO INTER. ALUM. ARC/ELIPSE	ARC/ELIPSE ALUM.INTER.WHOLE
ESC.11	CONJUNTO INTER. ARC/ELIPSE LATON 110V	110V ARC/ELIPSE BRASS EXCH.WHOLE
ESC.12	CONJUNTO INTER. ARC/ELIPSE ALUM.110V	110 ARC/ELIPSE ALUM.EXCH.WHOLE
ESC.13	CONJUNTO INFERIOR PORTA FIJO	FIXED FILTERHOLDER LOWER WHOLE
ESC.37	GRUPO THERM. LATON BASIC 230V	THERM. GROUP BRASS BASIC 230V
ESC.38	GRUPO THERM. ALUMIN. BASIC 230V	THERM. GROUP ALUM. BASIC 230V
ESC137	GRUPO THERM. LATON BASIC 120V	THERM. GROUP BRASS BASIC 120V
ESC138	GRUPO THERM. ALUMIN. BASIC 120V	THERM. GROUP ALUM. BASIC 120V
I...1	BASE PORTA FIJO	FIXED FILTERHOLDER BASE
I...2	VASTAGO	BRASS ROD
I...5	PIVOTE LEVA	BRASS LEVER PIVOT
I...7	CAMARA COMPRESION	COMPRESSION CHAMBER
I...8	EMBOLO LATON	BRASS PISTON
I...9	CUERPO VALVULA RETENCION	RETENTION VALVE BODY
I..11	MEMBRANA SILICONA	SILICONE MEMBRANE
I..12	TAPETA CAMARA LATON	BRASS CHAMBER LID
I..13	VALVULA SILICONA INTERC.	SILICONE VALVE
I..14	CASQUILLO RODADURA	CAP
I..15	MUELLE VALVULA RETENCION	RETENTION VALVE SPRING
I..17	TORICA UNION INTERCAMB. SILICONA	SILICONE RING
I..18	JUNTA TORICA CIALDA	RING
I..19	TORNILLO APRIETE SOPORTE MANGO	SCREW
I..20	TORNILLO GUIA	GUIDE SCREW
I..22	FILTRO CIALDA Nº1	Nº1 POD FILTER
I..23	FILTRO CIALDA Nº2	Nº2 POD FILTER
I..26	TAPA INTERCAMBIADOR LATON	BRASS EXCHANGER LID
I..28	TORICA INTERCAMBIADOR SILICONA	SILICONE RING
I..34	TAPETA CAMARA ALUMINIO	ALUMINIUM COVER
I..36	TAPA INTERCAMB. ALUMINIO	ALUMINIUM EXCHANGER LID
I..39	RODILLO LEVA	LEVER ROLLER
I..42	TERMOSTATO 95º	95º THERMOSTAT
I..43	TERMOSTATO 140º	140º THERMOSTAT
I..44	RACOR CODO	ELBOW FITTING
I..45	RACOR RECTO	STRAIGHT FITTING
I..46	REFUERZO TUBO	PIPE REINFORCEMET
I..47	TERMINAL MASA	TERMINALE
I..49	TUBO CHIMENEA	PIPE
I..55	DUCHA	SHOWER
I..69	FILTRO CIALDA Nº0	Nº0 FILTER
I..71	PIPETA ASPIRACION	SUCTION FITTING
I..76	EJE GRIFO	TAP ROD
I..77	FIJACION TUBO VAPOR	PIPE STEAM FIXATION
I..80	PROTECTOR TUBO VAPOR	STEAM PIPE PROTECTOR
I..84	SOPORTE BOMBA 90º	90º PUMP SUPPORT
I..85	POMO GRIFO	TAP HANDLE
I..86	EMBELLECEDOR POMO INOX	INOX HANLE LID
I..90	RACOR CODO	ELBOW FITTING
I..91	JUNTA TORICA EJE	SILICONE RING
I..94	TUERCA APRIETE GRIFO	TAP NUT
I..99	TORNILLO SOPORTE GRIFO INOX	TAP SUPPORT INOX SCREW
I..134	SOPORTE GRIFO	TAP SUPPORT
I..138	TUERCA BICONO	BICONE NUT
I..139	BICONO 6 mm	BICONE
I..140	CABLE RED	ELECTRIC WIRING
I..141	CABLE RED UK	UK WIRING
I..142	CABLE RED SUIZA	SWITZERLAND WIRING
I..143	CABLE RED ISRAEL	ISRAEL WIRING
I..145	CABLE RED AUSTRALIA	AUSTRALIAN WIRING
I..147	CONDENSADOR	CONDENSER
I..155	CABLE ARC PF T.B	ARC WIRING
I..157	MUELLE FIJACION FUSIBLE PF	SPRING
I..167	PLACA IMPULSO BOMBA 230V	PUMP CIRCUIT
I..173	JUNTA GRUPO INT. TEFLON	TEFLON GASKET
I..185	PROTECTOR PORTA FIJO	FIXED HOLDER PROTECTOR
I..192	TUERCA LATON	BRASS NUT
I..230	EMBOLO CON DUCHA	PISTON WITH SHOWER
I..283	PLACA IMPULSOS BOMBA 110V	110V PUMP CIRCUIT
I..289	CONJUNTO MANGO	HANDLE WHOLE
I..292	BOMBA ULKA EP-5 230V PLASTICO	ULKA EP-5 230V PUMP
I..339	TERMOSTATO 98º	98º THERMOSTAT
I..356	TORNILLO ALLEN	SCREW
I..358	TORNILLO PORTADUCHA INOX	INOX SCREW
I..361	C.INTERC. ALUMINIO+RESIST. 110V	110V RESIS.ALUMINIUM THERM.BODY
I..362	C.INTERC. ALUMINIO+RESIST. 220V	220V RESIS.ALUMINIUM THERM.BODY
I..364	C.INTERC. LATON+RESIS. 220V	220V RESIS+BRASS THERM. BODY
I..398	TUERCA AUTOBLOCANTE M-3	M-3 AUTOBLOC NUT
I.410	TUBO TEFLON 4x6 (85MM)	TEFLON PIPE 4x6 (85MM)
I.413	TUBO SILICONA 5x8 (205MM)	SILICONE PIPE 5x8 (205MM)
I.419	TUBO TEFLON 4x6 (115 mm)	TEFLON PIPE 4x6 (115 mm)
I.430	TORNILLO M5x6	M5x6 SCREW
I.437	TUBO SILICONA 4x7 (75MM)	4x7 (75MM) SILICONE PIPE
I.439	TUBO SILICONA 4x7 (100mm)	SILICONE PIPE 4x7 (100mm)
I.444	CABLE RED USA	USA WIRING
I.447	TUBO SILICONA 4x7 (25mm)	SILICONE PIPE 4x7 (25mm)
I.448	CABLEADO BASIC PF / ARC FUN PF	ARC FUN FF/BASIC FF WIRING
I.482	TE PORTATUBOS	FITTING
I.627	FILTRO CIALDA Nº 1A	Nº 1A FILTER
I.675	BOMBA 110V 52W PLASTICO	110V 52W PLASTIC PUMP
I.68A	CUERPO GRIFO	TAP BODY
I.68L	PROLONGADOR GRIFO LARGO	LONG TAP EXTENSION
I.693	VALVULA S-2 REFORZADA	S-2 REINFORCED VALVE
I.706	ELECTROVALVULA PASO 1.5 110V	120V 3 WAYS SOLENOID
I.710	TUERCA VALVULA RETENCION CAPS	NUT
I.723	TORNILLO DIN 7985 M3x5 ZN	SCREW DIN 7985 M3 X 5 ZN
I.816	PIÑA VAPOR CON ROSCA	THREADED STEAM STEP
I.820	TUBO CAPPUCCINO STEEL	CAPPUCCINO STEEL PIPE
I.825	CHAPA MECANISMO BASIC	BASIC MECHANISME PLATE
I.857	POMO GRIFO BLANCO	WHITE HANDLE TAP
I.858	MANGO PORTAFILTRO BLANCO	WHITE FILTERHANDLE
I.859	PROTECTOR TUBO VAPOR BLANCO	STEAM PIPE WHITE PROTECTOR
I.867	EMBUDO PLASTICO PF	PLASTIC FUNNEL PF
I.868	SALIDA 1 VIA PLASTICO	PLASTIC 1 WAY OUTLET
I.891	BOQUILLA CAPPUCCINO ROSCADA	NUT CAPPUCCINO NOZZLE
I.892	TUBO VAPOR	PIPE STEAM
I.894	TUBO VAPOR STEEL	SCREW NOZZLE PIPE STEAM QUIMIC
I.895	TORNILLO FIJACION EMBUDO	FUNNEL FIXED SCREW
I.959	EMBOLO 40	PISTON 40
I.1057	ELECTROV. 3 VIAS 230V 1/8 1/8 P	230V 1/8 1/8 PASS 1.5 SOLENOID
I.1065	FILTRO R101 MOKADOR	FILTER R101 MOKADOR
I.1114	BOQUILLA CAPPUCCINO 3 SALIDAS	CAPPUCCINO NOZZLE 3 WAYS
I.1136	TORNILLO ALLEN M5X35 INOX	ALLEN SCREW M5X35 INOX
I.1138	TORNILLO DIN 7985 M5x15 INOX	SCREW DIN 7985 M5X15 INOX
I.1149	CABLE FUSIBLE ARC BASIC PF	ARC/BASIC PF FUSE WIRING
MI..84	ARANDELA ELASTICA	WASHER
PM...4	CONJUNTO BOMBA ARC PF 220V	220V PF ARC PUMP WHOLE
PM...8	CONJUNTO BOMBA BASIC PF 220V	220V PF BASIC PUMP WHOLE
PM..14	CONJUNTO BOMBA ARC PF 110V	110V PF ARC PUMP WHOLE
PM..18	CONJUNTO BOMBA BASIC PF 110V	110V PF BASIC PUMP WHOLE
PM..23	GRIFO BASIC	BASIC TAP
PM..25	GRIFO ARC/ELIPSE/UNO	ARC/ELIPSE/UNO TAP
PM..95	CONJUNTO POMO NEGRO	BLACK HANDLE WHOLE
PM..96	CONJUNTO POMO BLANCO	WHITE HANDLE WHOLE

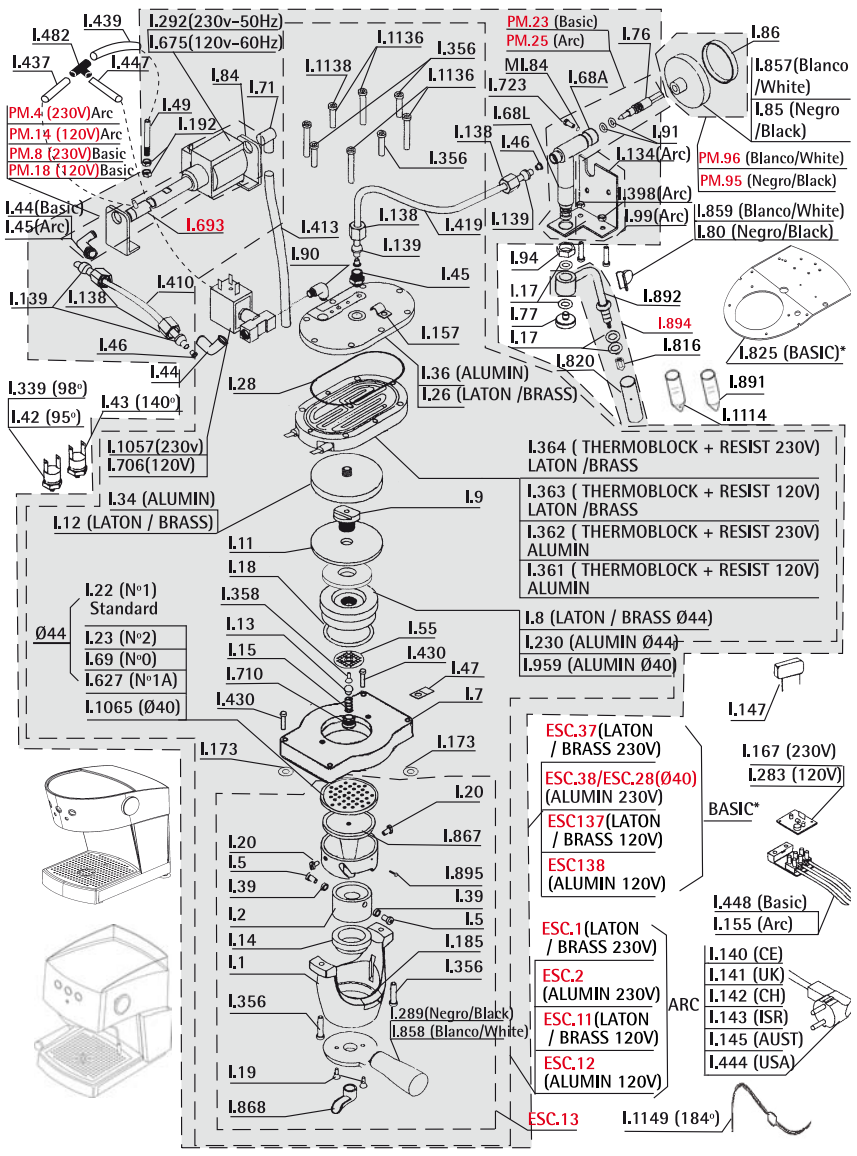

Grupo Thermoblock Basic One ■ Basic One Thermoblock Group

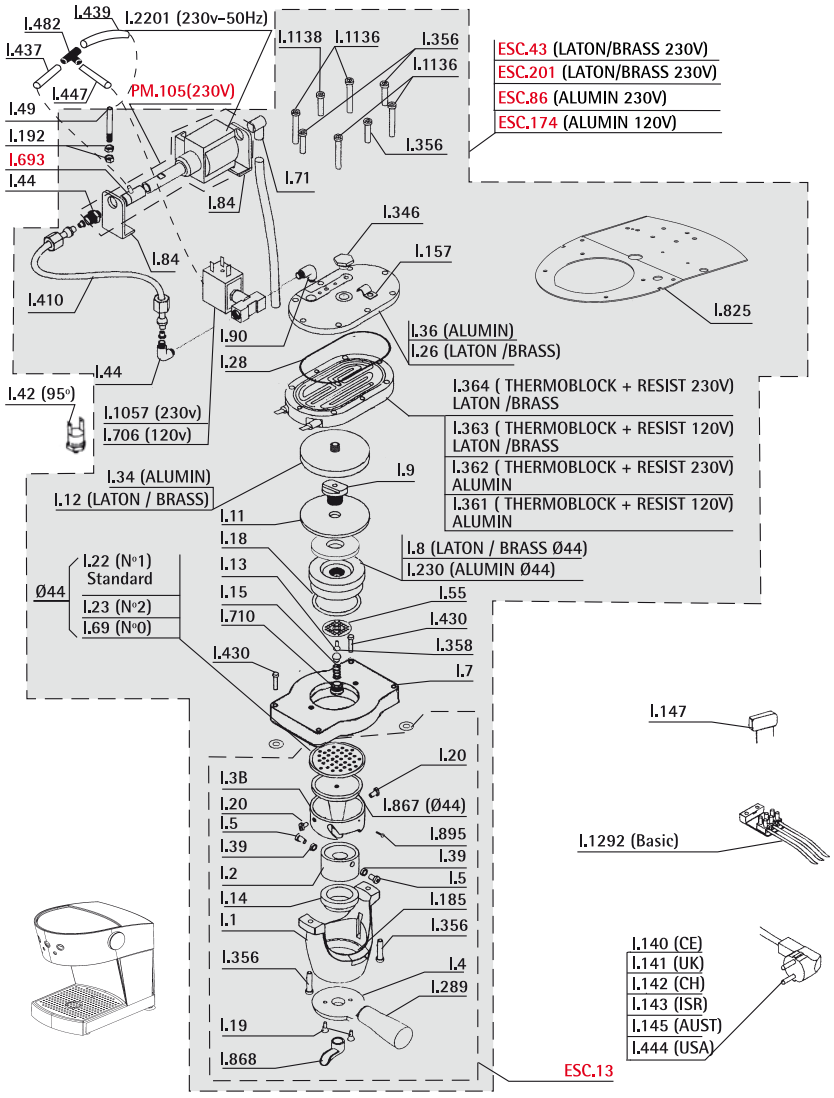

REF.	DESCRIPCIÓN	DESCRIPTION
ESC.13	CONJUNTO INFERIOR PORTA FIJO	FIXED FILTERHOLDER LOWER WHOLE
ESC.43	GRUPO THERM. LATON BASIC ONE 230V	230V ONE BASIT LATON THERM. GROUP
ESC.86	GRUPO THERM. ALUMIN. BASIC ONE 230V	230V ONE BASIC ALUMIN. THERM.
ESC174	GRUPO BASIC ONE THERM. ALUMINIO	110V ALUMINIUM THERM ONE BASIC
ESC201	CONJUNTO BOMBA /GRIFO CAPSULA	CAPSULE TAP/PUMP WHOLE
I....1	BASE PORTA FIJO	FIXED FILTERHOLDER BASE
I....2	VASTAGO	BRASS ROD
I....4	SOPORTE MANGO	HANDLE SUPPORT
I....5	PIVOTE LEVA	BRASS LEVER PIVOT
I....7	CAMARA COMPRESION	COMPRESSION CHAMBER
I....8	EMBOLO LATON	BRASS PISTON
I....9	CUERPO VALVULA RETENCION	RETENTION VALVE BODY
I...11	MEMBRANA SILICONA	SILICONE MEMBRANE
I...12	TAPETA CAMARA LATON	BRASS CHAMBER LID
I...13	VALVULA SILICONA INTERC.	SILICONE VALVE
I...14	CASQUILLO RODADURA	CAP
I...15	MUELLE VALVULA RETENCION	RETENTION VALVE SPRING
I...18	JUNTA TORICA CIALDA	RING
I...19	TORNILLO APRIETE SOPORTE MANGO	SCREW
I...20	TORNILLO GUIA	GUIDE SCREW
I...22	FILTRO CIALDA Nº1	Nº1 POD FILTER
I...23	FILTRO CIALDA Nº2	Nº2 POD FILTER
I...26	TAPA INTERCAMBIADOR LATON	BRASS EXCHANGER LID
I...28	TORICA INTERCAMB. SILICONA	SILICONE RING
I...34	TAPETA CAMARA ALUMINIO	ALUMINIUM CHAMBER COVER
I...36	TAPA INTERCAMB. ALUMINIO	ALUMINIUM EXCHANGER LID
I...39	RODILLO LEVA	LEVER ROLLER
I...3B	LEVA	LEVER
I...42	TERMOSTATO 95º	95º THERMOSTAT
I...44	RACOR CODO	ELBOW FITTING
I...49	TUBO CHIMENEA	PIPE
I...55	DUCHA	SHOWER
I...69	FILTRO CIALDA Nº0	Nº0 FILTER
I...71	PIPETA ASPIRACION	SUCTION FITTING
I...84	SOPORTE BOMBA 90º	90º PUMP SUPPORT
I...90	RACOR CODO	ELBOW FITTING
I..140	CABLE RED	ELECTRIC WIRING
I..141	CABLE RED UK	UK WIRING
I..142	CABLE RED SUIZA	SWITZERLAND WIRING
I..143	CABLE RED ISRAEL	ISRAEL WIRING
I..145	CABLE RED AUSTRALIA	AUSTRALIAN WIRING
I..147	CONDENSADOR	CONDENSER
I..157	MUELLE FIJACION FUSIBLE P.F	SPRING
I..185	PROTECTOR PORTA FIJO	FIXED HOLDER PROTECTOR
I..192	TUERCA LATON	BRASS NUT
I..230	EMBOLO CON DUCHA	PISTON WITH SHOWER
I..289	CONJUNTO MANGO	HANDLE WHOLE
I..346	TAPON 1/8	1/8 CAP
I..356	TORNILLO ALLEN	SCREW
I..358	TORNILLO PORTADUCHA INOX	INOX SCREW
I..361	C.INTERC. ALUMINIO+RESISTENCIA 110V	110V RESIS.ALUMINIUM THER.BODY
I..362	C.INTERC. ALUMINIO+ RESISTENCIA 220V	220V RESIS.ALUMINIUM THER.BODY
I..363	C.INTERC. LATON+RESISTENCIA 110V	110V RESIS+BRASS THERM.BODY
I..364	C.INTERC. LATON+RESISTENCIA 220V	220V RESIS+BRASS THERM. BODY
I..410	TUBO TEFLON 4x6 (85MM)	TEFLON PIPE 4x6 (85MM)
I..430	TORNILLO M5x6	M5x6 SCREW
I..437	TUBO SILICONA 4x7 (75MM)	4x7 (75MM) SILICONE PIPE
I..439	TUBO SILICONA 4x7 (100mm)	SILICONE PIPE 4x7 (100mm)
I..444	CABLE RED USA	USA WIRING
I..447	TUBO SILICONA 4x7 (25mm)	SILICONE PIPE 4x7 (25mm)
I..482	TE PORTATUBOS	FITTING
I..693	VALVULA S-2 REFORZADA	S-2 REINFORCED VALVE
I..706	ELECTROVALVULA PASO 1.5 110V	120V 3 WAYS SOLENOID
I..710	TUERCA VALVULA RETENCION CAPS	NUT
I..825	CHAPA MECANISMO BASIC	BASIC MECHANISME PLATE
I..867	EMBUDO PLASTICO PF	PLASTIC FUNNEL PF
I..868	SALIDA 1 VIA PLASTICO	PLASTIC 1 WAY OUTLET
I..895	TORNILLO FIJACION EMBUDO	FUNNEL FIXED SCREW
I.1057	ELECTROV. 3 VIAS 230V 1/8 1/8 P	230V 1/8 1/8 PASS 1.5 SOLENOID
I.1136	TORNILLO ALLEN M5x35 INOX	ALLEN SCREW M5X35 INOX
I.1138	TORNILLO DIN 7985 M5x15 INOX	SCREW DIN 7985 M5X15 INOX
I.1292	CABLEADO BASIC ONE	ONE BASIC WIRING
I.2201	BOMBA ULKA EP5FM 230V 50Hz	EP5FM 230V 50Hz INNOVA 40W U
PM.105	CONJUNTO PATA MOLINO INOX	INOX GROUND FOOT WHOLE

Grupo Thermoblock Dream +11/2008 ■ Dream Thermoblock Group +11/2008

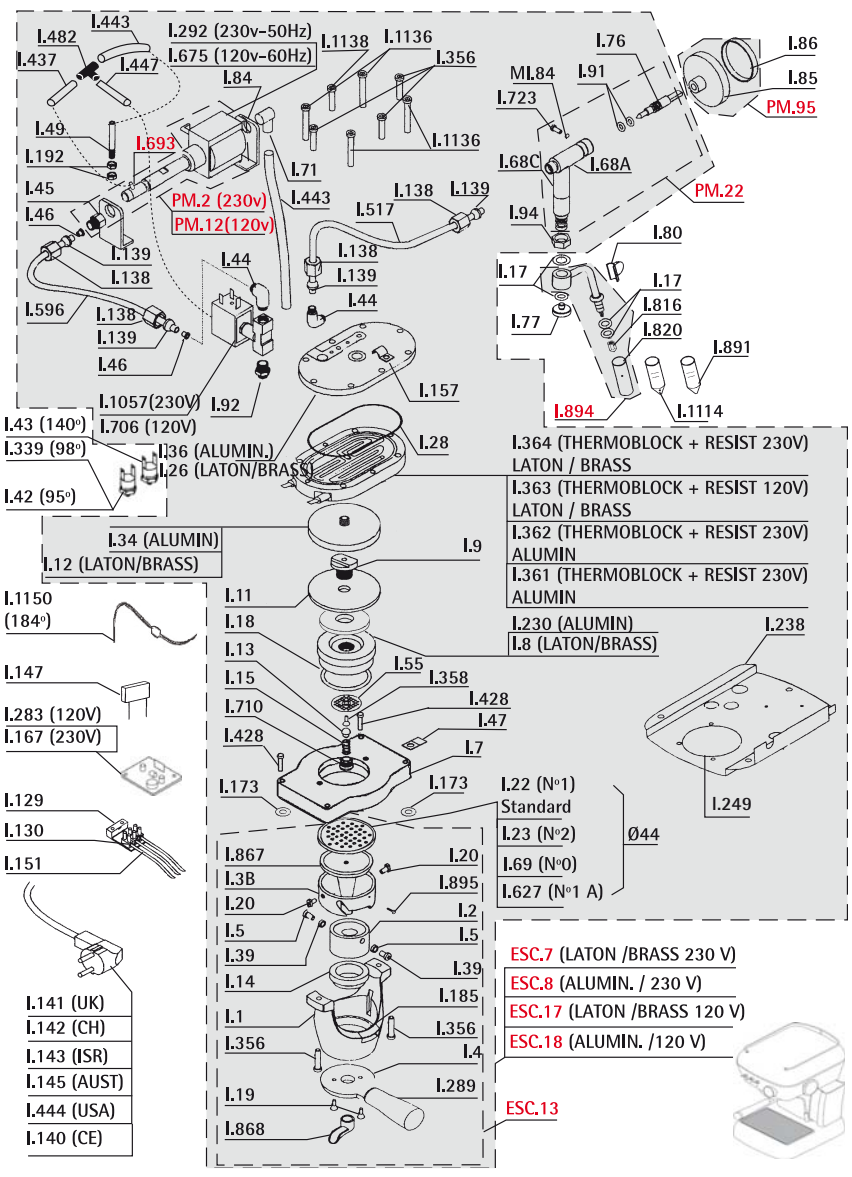

REF.	DESCRIPCIÓN	DESCRIPTION
ESC..7	CONJUNTO INTER. LATON DREAM 230V	230V DREAM BRASS EXCH.WHOLE
ESC..8	CONJUNTO INTER. ALUM.DREAM 230V	230V DREAM ALUM.EXCHANG.WHOLE
ESC.13	CONJUNTO INFERIOR PORTA FIJO	FIXED FILTERHOLDER LOWER WHOLE
ESC.17	CONJUNTO INTER. LATON DREAM 110V	110V DREAM BRASS EXCHAN.WHOLE
ESC.18	CONJUNTO INTER. ALUM.DREAM 110V	110V DREAM ALUM.EXCH.WHOLE
I....1	BASE PORTA FIJO	FIXED FILTERHOLDER BASE
I....2	VASTAGO	BRASS ROD
I....4	SOPORTE MANGO	HANDLE SUPPORT
I....5	PIVOTE LEVA	BRASS LEVER PIVOT
I....7	CAMARA COMPRESION	COMPRESSION CHAMBER
I....8	EMBOLO LATON	BRASS PISTON
I....9	CUERPO VALVULA RETENCION	RETENTION VALVE BODY
I...11	MEMBRANA SILICONA	SILICONE MEMBRANE
I...12	TAPETA CAMARA LATON	BRASS CHAMBER LID
I...13	VALVULA SILICONA INTERC.	SILICONE VALVE
I...14	CASQUILLO RODADURA	CAP
I...15	MUELLE VALVULA RETENCION	RETENTION VALVE SPRING
I...17	TORICA UNION INTERCAMB. SILICONA	SILICONE RING
I...18	JUNTA TORICA CIALDA	RING
I...19	TORNILLO APRIETE SOPORTE MANGO	SCREW
I...20	TORNILLO GUIA	GUIDE SCREW
I...22	FILTRO CIALDA Nº1	Nº1 POD FILTER
I...23	FILTRO CIALDA Nº2	Nº2 POD FILTER
I...26	TAPA INTERCAMBIADOR LATON	BRASS EXCHANGER LID
I...28	TORICA INTERCAMB. SILICON.	SILICONE RING
I...34	TAPETA CAMARA ALUMINIO	ALUMINIUM COVER
I...36	TAPA INTERCAMB. ALUMINIO	ALUMINIUM EXCHANGER LID
I...39	RODILLO LEVA	LEVER ROLLER
I...3B	LEVA	LEVER
I...42	TERMOSTATO 95º	95º THERMOSTAT
I...43	TERMOSTATO 140º	140º THERMOSTAT
I...44	RACOR CODO	ELBOW FITTING
I...45	RACOR RECTO	STRAIGHT FITTING
I...46	REFUERZO TUBO	PIPE REINFORCEMET
I...47	TERMINAL MASA	TERMINALE
I...49	TUBO CHIMENEA	PIPE
I...55	DUCHA	SHOWER
I...69	FILTRO CIALDA Nº0	Nº0 FILTER
I...71	PIPETA ASPIRACION	SUCTION FITTING
I...76	EJE GRIFO	TAP ROD
I...77	FIJACION TUBO VAPOR	PIPE STEAM FIXATION
I...80	PROTECTOR TUBO VAPOR	STEAM PIPE PROTECTOR
I...84	SOPORTE BOMBA 90º	90º PUMP SUPPORT
I...85	POMO GRIFO	TAP HANDLE
I...86	EMBELLECEDOR POMO INOX	INOX HANLE LID
I...91	JUNTA TORICA EJE	SILICONE RING
I...92	MACHON	FITTING MALE
I...94	TUERCA APRIETE GRIFO	TAP NUT
I..129	RETENEDOR CABLE	WIRING TERMINAL
I..130	REGLETA 3 VIAS	3 WAYS CONNECTOR
I..138	TUERCA BICONO	BICONE NUT
I..139	BICONO 6 mm	BICONE
I..140	CABLE RED	ELECTRIC WIRING
I..141	CABLE RED UK	UK WIRING
I..142	CABLE RED SUIZA	SWITZERLAND WIRING
I..143	CABLE RED ISRAEL	ISRAEL WIRING
I..145	CABLE RED AUSTRALIA	AUSTRALIAN WIRING
I..147	CONDENSADOR	CONDENSER
I..151	CABLEADO DREAM PF T.B	DREAM WIRING
I..157	MUELLE FIJ.FUSIBLE P.F	SPRING
I..167	PLACA IMPULSO BOMBA 230V	PUMP CIRCUIT
I..173	JUNTA GRUPO INT. TEFLON	TEFLON GASKET
I..185	PROTECTOR PORTA FIJO	FIXED HOLDER PROTECTOR
I..192	TUERCA LATON	BRASS NUT
I..230	EMBOLO CON DUCHA	PISTON WITH SHOWER
I..238	CHAPA GRUPO DREAM	DREAM GROUP PLATE
I..249	PLACA SOPORTE	SUPPORT PLATE
I..283	PLACA IMPULSOS BOMBA 110V	110V PUMP CIRCUIT
I..289	CONJUNTO MANGO	HANDLE WHOLE
I..292	BOMBA ULKA EP-5 230V PLASTICO	ULKA EP-5 230V PUMP
I..339	TERMOSTATO 98º	98º THERMOSTAT
I..356	TORNILLO ALLEN	SCREW
I..358	TORNILLO PORTADUCHA INOX	INOX SCREW
I..361	C.INTERC. ALUMINIO+RESISTENCIA 110V	110V RESIS. ALUMINIUM THERM. BODY
I..362	C.INTERC. ALUMINIO+RESISTENCIA 220V	220V RESIS. ALUMINIUM THERM. BODY
I..363	C.INTERC. LATON+RESISTENCIA 110V	110V RESIS.+BRASS THERM.BODY
I..364	C.INTERC. LATON+RESISTENCIA 220V	220V RESIS.+BRASS THERM. BODY
I..428	TORNILLO M5x20	M5x20 SCREW
I..437	TUBO SILICONA 4x7 (75MM)	4x7 (75MM) SILICONE PIPE
I..443	TUBO SILICONA 4x7 (90mm)	SILICONE PIPE 4x7 (90mm)
I..444	CABLE RED USA	USA WIRING
I..447	TUBO SILICONA 4x7 (25mm)	SILICONE PIPE 4x7 (25mm)
I..482	TE PORTATUBOS	FITTING
I..517	TUBO TEFLON 4x6 (54MM)	4X6 (54MM) TEFLON PIPE
I..596	TUBO TEFLON 4x6 (65mm)	TEFLON PIPE 4x6 (65MM)
I..627	FILTRO CIALDA Nº 1A	Nº 1A FILTER
I..675	BOMBA 110V 52W PLASTICO	110V 52W PLASTIC PUMP
I..68A	CUERPO GRIFO	TAP BODY
I..68C	PROLONGADOR GRIFO CORTO	SHORT TAP EXTENSION
I..693	VALVULA S-2 REFORZADA	S-2 REINFORCED VALVE
I..706	ELECTROVALVULA PASO 1.5 110V	120V 3 WAYS SOLENOID
I..710	TUERCA VALVULA RETENCION CAPS	NUT
I..723	TORNILLO DIN 7985 M3x5 ZN	SCREW DIN 7985 M3 X 5 ZN
I..816	PIÑA VAPOR CON ROSCA	THREADED STEAM STEP
I..820	TUBO CAPPUCCINO STEEL	CAPPUCCINO STEEL PIPE
I..867	EMBUDO PLASTICO PF	PLASTIC FUNNEL PF
I..868	SALIDA 1 VIA PLASTICO	PLASTIC 1 WAY OUTLET
I..891	BOQUILLA CAPPUCCINO ROSCADA	NUT CAPPUCCINO NOZZLE
I..894	TUBO VAPOR STEEL	SCREW NOZZLE PIPE STEAM QUIMIC
I..895	TORNILLO FIJACION EMBUDO	FUNNEL FIXED SCREW
I.1057	ELECTROV. 3 VIAS 230V 1/8 1/8 P	230V 1/8 1/8 PASS 1.5 SOLENOID
I.1114	BOQUILLA CAPPUCCINO 3 SALIDAS	CAPPUCCINO NOZZLE 3 WAYS
I.1136	TORNILLO ALLEN M5x35 INOX	ALLEN SCREW M5x35 INOX
I.1138	TORNILLO DIN 7985 M5x15 INOX	SCREW DIN 7985 M5x15 INOX
I.1150	CABLE FUSIBLE DREAM	DREAM FUSE WIRING
MI..84	ARANDELA ELASTICA	WASHER
PM...2	CONJUNTO BOMBA DREAM PF 220V	220V PF DREAM PUMP WHOLE
PM..12	CONJUNTO BOMBA DREAM PF 110V	110V PF DREAM PUMP WHOLE
PM..22	GRIFO DREAM	DREAM TAP
PM..95	CONJUNTO POMO NEGRO	BLACK HANDLE WHOLE

ASCASO

381 Grupo Thermoblock Elipse +11/2008 ■ Elipse Thermoblock Group +11/2008

Ref.	Descripción	Description
ESC.13	CONJUNTO INFERIOR PORTA FIJO	FIXED FILTERHOLDER LOWER WHOLE
ESC.21	CONJUNTO INTERCAMB. LATON ELIPSE	BRASS ELIPSE F.F.WHOLE
ESC.22	CONJUNTO INTERCAMB. ALUM. ELIPSE	ALUM. ELIPSE F.F.WHOLE
ESC.23	CONJUNTO INTERC. LATON ELIPSE 110V	110V BRASS ELIPSE F.F.WHOLE
ESC.24	CONJUNTO INTERC. ALUMIN. ELIPSE 110V	110V ALUM.ELIPSE F.F.WHOLE
I....1	BASE PORTA FIJO	FIXED FILTERHOLDER BASE
I....2	VASTAGO	BRASS ROD
I....4	SOPORTE MANGO	HANDLE SUPPORT
I....5	PIVOTE LEVA	BRASS LEVER PIVOT
I....7	CAMARA COMPRESION	COMPRESSION CHAMBER
I....8	EMBOLO LATON	BRASS PISTON
I....9	CUERPO VALVULA RETENCION	RETENTION VALVE BODY
I....11	MEMBRANA SILICONA	SILICONE MEMBRANE
I....12	TAPETA CAMARA LATON	BRASS CHAMBER LID
I....13	VALVULA SILICONA INTERC.	SILICONE VALVE
I....14	CASQUILLO RODADURA	CAP
I....15	MUELLE VALVULA RETENCION	RETENTION VALVE SPRING
I....17	TORICA UNION INTERCAMB. SILICONA	SILICONE RING
I....18	JUNTA TORICA CIALDA	RING
I....19	TORNILLO APRIETE SOPORTE MANGO	SCREW
I....20	TORNILLO GUIA	GUIDE SCREW
I....22	FILTRO CIALDA Nº1	Nº1 POD FILTER
I....23	FILTRO CIALDA Nº2	Nº2 POD FILTER
I....26	TAPA INTERCAMBIADOR LATON	BRASS EXCHANGER LID
I....28	TORICA INTERCAMB. SILICONA	SILICONE RING
I....30	TORNILLO FIJACION INTERCAMB.	SCREW
I....31	TUERCA FIJACION INTERCAMB	NUT
I....34	TAPETA CAMARA ALUMINIO	ALUMINIUM COVER
I....36	TAPA INTERCAMB.ALUMINIO	ALUMINIUM EXCHANGER LID
I....39	RODILLO LEVA	LEVER ROLLER
I....38	LEVA	LEVER
I....42	TERMOSTATO 95º	95º THERMOSTAT
I....43	TERMOSTATO 140º	140º THERMOSTAT
I....44	RACOR CODO	ELBOW FITTING
I....46	REFUERZO TUBO	PIPE REINFORCEMET
I....47	TERMINAL MASA	TERMINALE
I....55	DUCHA	SHOWER
I....69	FILTRO CIALDA Nº0	Nº0 FILTER
I....71	PIPETA ASPIRACION	SUCTION FITTING
I....76	EJE GRIFO	TAP ROD
I....77	FIJACION TUBO VAPOR	PIPE STEAM FIXATION
I....80	PROTECTOR TUBO VAPOR	STEAM PIPE PROTECTOR
I....84	SOPORTE BOMBA 90º	90º PUMP SUPPORT
I....85	POMO GRIFO	TAP HANDLE
I....86	EMBELLECEDOR POMO INOX	INOX HANLE LID
I....91	JUNTA TORICA EJE	SILICONE RING
I....92	MACHON	FITTING MALE
I....94	TUERCA APRIETE GRIFO	TAP NUT
I....99	TORNILLO SOPORTE GRIFO INOX	TAP SUPPORT INOX SCREW
I.129	RETENEDOR CABLE	WIRING TERMINAL
I.130	REGLETA 3 VIAS	3 WAYS CONNECTOR
I.134	SOPORTE GRIFO	TAP SUPPORT
I.138	TUERCA BICONO	BICONE NUT
I.139	BICONO 6 mm	BICONE
I.140	CABLE RED	ELECTRIC WIRING
I.141	CABLE RED UK	UK WIRING
I.142	CABLE RED SUIZA	SWITZERLAND WIRING
I.143	CABLE RED ISRAEL	ISRAEL WIRING
I.145	CABLE RED AUSTRALIA	AUSTRALIAN WIRING
I.147	CONDENSADOR	CONDENSER
I.148	CABL. INT. ELIPSE PF T.ELE	ELIPSE WIRING
I.157	MUELLE FIJACION FUSIBLE PF	SPRING
I.167	PLACA IMPULSO BOMBA 230V	PUMP CIRCUIT
I.185	PROTECTOR PORTA FIJO	FIXED HOLDER PROTECTOR
I.230	EMBOLO CON DUCHA	PISTON WITH SHOWER
I.246	SOPORTE PLACA	PLATE SUPPORT
I.283	PLACA IMPULSOS BOMBA 110V	110V PUMP CIRCUIT
I.289	CONJUNTO MANGO	HANDLE WHOLE
I.292	BOMBA ULKA EP-5 230V PLASTICO	ULKA EP-5 230V PUMP
I.339	TERMOSTATO 98º	98º THERMOSTAT
I.356	TORNILLO ALLEN	SCREW
I.358	TORNILLO PORTADUCHA INOX	INOX SCREW
I.361	C.INTERC. ALUMINIO+RESISTENCIA 110V	110V RESIS. ALUMINIUM THERM. BODY
I.362	C.INTERC. ALUMINIO+RESISTENCIA 220V	220V RESIS. ALUMINIUM THERM. BODY
I.363	C.INTERC. LATON+RESISTENCIA 110V	110V RESIS. + BRASS THERM. BODY
I.364	C.INTERC. LATON+RESISTENCIA 220V	220V RESIS. + BRASS THERM. BODY
I.398	TUERCA AUTOBLOCANTE M-3	M-3 AUTOBLOC NUT
I.410	TUBO TEFLON 4x6 (85MM)	TEFLON PIPE 4x6 (85MM)
I.412	TUBO SILICONA 4x7 (170mm)	SILICONE PIPE 4x7 (170mm)
I.417	TUBO SILICONA 4x7 (60mm)	SILICONE PIPE 4x7 (60mm)
I.425	TUBO TEFLON 4x6 (58MM)	TEFLON PIPE 4x6 (58MM)
I.426	TUBO SILICONA 5x8 (370mm)	SILICONE PIPE 5x8 (370mm)
I.443	TUBO SILICONA 4x7 (90mm)	SILICONE PIPE 4x7 (90mm)
I.444	CALE RED USA	USA WIRING
I.482	TE PORTATUBOS	FITTING
I.627	FILTRO CIALDA Nº 1A	Nº 1A FILTER
I.675	BOMBA 110V 52W PLASTICO	110V 52W PLASTIC PUMP
I.68A	CUERPO GRIFO	TAP BODY
I.68L	PROLONGADOR GRIFO LARGO	LONG TAP EXTENSION
I.693	VALVULA S-2 REFORZADA	S-2 REINFORCED VALVE
I.706	ELECTROVALVULA PASO 1.5 110V	120V 3 WAYS SOLENOID
I.710	TUERCA VALVULA RETENCION CAPS	NUT
I.723	TORNILLO DIN 7985 M3 X 5 ZN	SCREW DIN 7985 M3x5 ZN
I.816	PIÑA VAPOR CON ROSCA	THREADED STEAM STEP
I.820	TUBO CAPPUCCINO STEEL	CAPPUCCINO STEEL PIPE
I.867	EMBUDO PLASTICO PF	PLASTIC FUNNEL PF
I.868	SALIDA 1 VIA PLASTICO	PLASTIC 1 WAY OUTLET
I.891	BOQUILLA CAPPUCCINO ROSCADA	NUT CAPPUCCINO NOZZLE
I.892	TUBO VAPOR	PIPE STEAM
I.894	TUBO VAPOR STEEL	SCREW NOZZLE PIPE STEAM QUIMIC
I.895	TORNILLO FIJACION EMBUDO	FUNNEL FIXED SCREW
I.959	EMBOLO 40	PISTON 40
I.1057	ELECTROV. 3 VIAS 230V 1/8 1/8 P	230V 1/8 1/8 PASS 1.5 SOLENOID
I.1065	FILTRO R101 MOKADOR	FILTER R101 MOKADOR
I.1114	BOQUILLA CAPPUCCINO 3 SALIDAS	CAPPUCCINO NOZZLE 3 WAYS
I.1136	TORNILLO ALLEN M5X35 INOX	ALLEN SCREW M5x35 INOX
I.1138	TORNILLO DIN 7985 M5X15 INOX	SCREW DIN 7985 M5x15 INOX
I.1231	CABLE FUSIBLE ELIPSE PF	ELIPSE PF FUSE WIRING
MI..84	ARANDELA ELASTICA	WASHER
PM..6	CONJUNTO BOMBA ELIPSE PF 220V	220V PF ELIPSE PUMP WHOLE
PM..16	CONJUNTO BOMBA ELIPSE PF 110V	110V PF ELIPSE PUMP WHOLE
PM..25	GRIFO ARC/ELIPSE/UNO	ARC/ELIPSE/UNO TAP
PM..95	CONJUNTO POMO NEGRO	BLACK HANDLE WHOLE

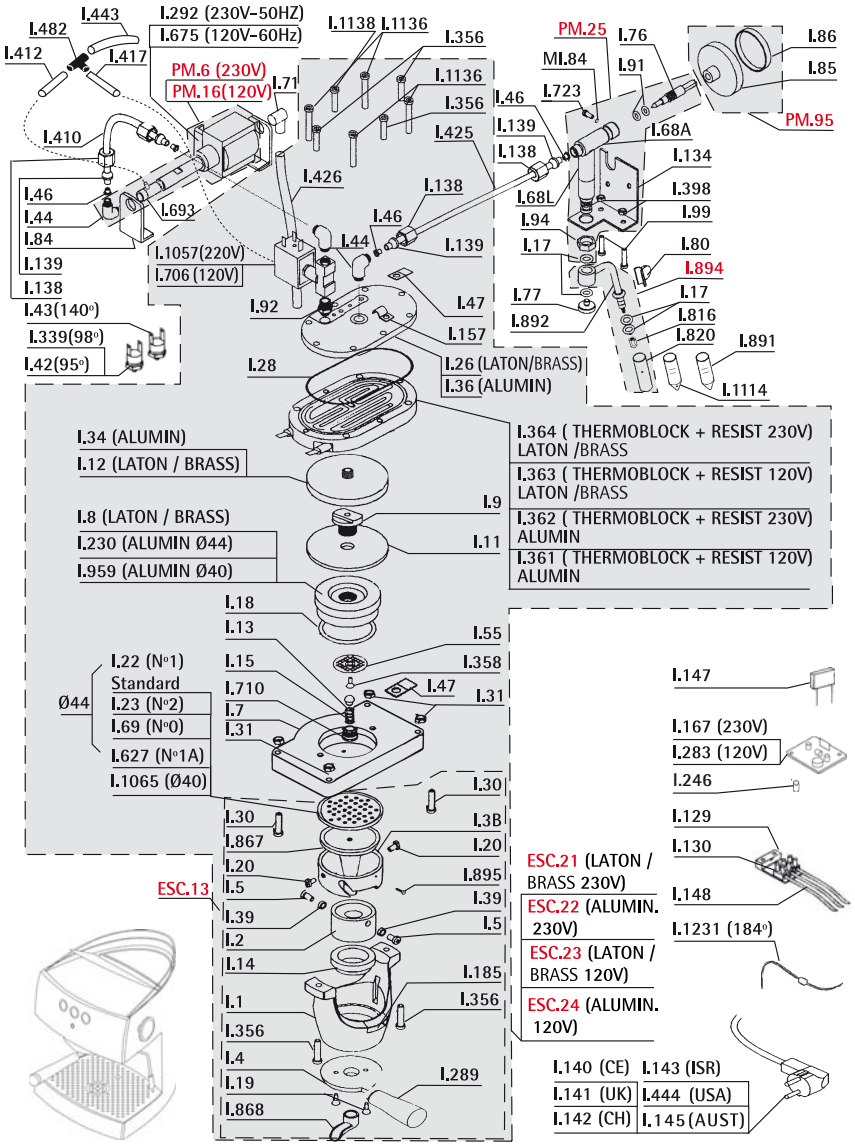

382 Grupo thermoblock Alu+Inox DREAM PF +09/2012 ■ DREAM PF Alu+ss Thermoblock Group +09/2012

Ref.	Descripción	Description
I.1	BASE PORTA FIJO PULIDO	FIXED FILTERHOLDER BASE
I.2	VASTAGO ALUMINIO	ALUMINIUM ROD
I.3B	LEVA	LEVER
I.4	SOPORTE MANGO	HANDLE SUPPORT
I.5	PIVOTE LEVA INOX	BRASS LEVER PIVOT
I.7	CAMARA DE COMPRESION	COMPRESSION CHAMBER
I.9	CUERPO VALVULA RETENCION	RETENTION VALVE BODY
I.11	MEMBRANA SILICONA DIAM. 74	SILICONE MEMBRANE
I.12	TAPETA CAMARA LATON	BRASS CHAMBER LID
I.13	VALVULA SILICONA	SILICONE VALVE
I.14	CASQUILLO RODADURA	CAP
I.17	JUNTA TORICA	SILICONE RING
I.18	JUNTA CIALDA GRUPO	SILICONE RING
I.19	TORN.APRIETE SOPORT.MANGO	SCREW
I.20	TORNILLO GUIA	GUIDE SCREW
I.22	FILTRO CIALDA Nº1	Nº1 POD FILTER
I.23	FILTRO CIALDA Nº2	Nº2 POD FILTER
I.30	TORNILLO FIJACION INTERCAMB.	SCREW
I.31	TUERCA M5	NUT
I.34	TAPETA CAMARA ALUMINIO	ALUMINUM CHAMBER LID
I.39	RODILLO LEVA	LEVER ROLLER
I.44	RACORD CODO	RL BOIX FITTING
I.46	REFUERZO TUBO	PIPE REINFORCEMET
I.47	TERMINAL MASA	TERMINALE
I.49	TUBO CHIMENEA	CHIMNEY PIPE
I.55	DUCHA	SHOWER
I.69	FILTRO CIALDA Nº0	Nº0 FILTER
I.71	PIPETA ASPIRACION	90º FITTING
I.77	FIJACION TUBO VAPOR CROMADO	PIPE STEAM SCREW
I.80	PROTECTOR TUBO VAPOR NEGRO	PROTECTOR STEAM PIPE
I.84	SOPORTE BOMBA 90º	PUMP SUPPORT
I.85	POMO GRIFO NEGRO	HANDLE
I.86	EMBELLECEDOR POMO INOX	INOX HANLE LID
I.90	RACOR CODO MACHO 1/8 LATON	FITTING
I.94	TUERCA APRIETE GRIFO	TAP NUT
I.129	RETENEDOR CABLE	TERMINAL WIRING
I.130	REGLETA 3 VIAS	TERMINAL BLOCK
I.135	RACOR CODO 13280 4 1/8	FITTING
I.138	TUERCA BICONO	NUT
I.139	BICONO DE 6	BICONE
I.140	CABLE RED EUROPEO	WIRING 230v
I.141	CABLE RED UK	WIRING UK
I.142	CABLE RED SUIZA	SWITZERLAND WIRING
I.143	CABLE RED ISRAEL	ISRAEL WIRING
I.145	CABLE RED AUSTRALIA	AUSTRALIAN WIRING
I.147	CONDENSADOR UL	CONDENSER
I.151	CABLEADO DREAM PF	DREAM WIRING
I.185	PROTECTOR PORTA FIJO	PROTECTOR
I.192	TUERCA LATON	NUT
I.230	EMBOLO ALUMINIO	PISTON WITH SHOWER
I.238	CHAPA GRUPO DREAM	DREAM GROUP SHEET
I.259	ELECTROV. 3 VIAS PASO 1.2 230V 1/8-1/8 0-15BAR	3 WAY SOLENOID
I.289	CJT.MANGO NEGRO	HANDLE WHOLE
I.339	TERMOSTATO 98º	98ºC THERMOSTAT
I.356	TORNILLO ALLEN M5x15 INOX	ALLEN SCREW
I.358	TORNILLO PORTADUCHA M4	M4 SCREW
I.363	C.INTERC.LATON+RESIST.110V	110VRESIST+BRASS THERM BODY
I.413	TUBO SILICONA 5x8 (205mm)	SILICONE PIPE 5x8 (205mm)
I.415	TUBO SILICONA 4x7 (65mm)	SILICONE PIPE 4x7 (65mm)
I.419	TUBO TEFLON 4x6 (115mm)	TEFLON PIPE 4x6 (115mm)
I.439	TUBO SILICONA 4x7 (100mm)	SILICONE PIPE 4x7 (100mm)
I.442	TUBO TEFLON 4x6 (105mm)	TEFLON PIPE 4x6 (105mm)
I.444	CABLE RED USA SJTO	USA WIRING (SJTO)
I.447	TUBO SILICONA 4x7 (25mm)	SILICONE PIPE 4x7 (25mm)
I.482	TE PORTATUBOS	FITTING
I.543	TERMOSTATO 165º CERAMICO	165º CERAMIC THERMOSTAT
I.627	FILTRO CIALDA Nº1 A	POD FILTER 1A
I.693	VALVULA S2 MONTADA	ASSEMBLED S2 VALVE
I.706	ELECTROV. 3 VIAS PASO 1.5 120V 1/8-1/8 0-15BAR	120V 3 WAYS SOLENOID
I.710	TUERCA VALVULA RETENCION CON DUCHA	NUT
I.723	TORNILLO DIN 7985 M3 X 5 ZN	DIN 7985 M3 X 5 ZN SCREW
I.731	TUBO TEFLON 4x6 (120mm)	4x6 (120mm) TEFLON PIPE
I.734	TUBO TEFLON 4x6 (145mm)	4x6 (145mm) TEFLON PIPE
I.816	PIÑA VAPOR CON ROSCA	THREADED STEAM STEP
I.820	TUBO CAPPUCCINO	CAPPUCCINO STEEL PIPE
I.867	EMBUDO PLASTICO PF	PLASTIC FUNNEL PF
I.868	SALIDA PLASTICO PF	COFFEE SPOUT 1 WAY PLASTIC
I.891	BOQUILLA CAPUCCINO ROSCADA 1 AGUJERO	NUT CAPPUCCINO NOZZLE
I.892	TUBO VAPOR	PIPE STEAM
I.894	TUBO VAPOR BOQUILLA ROSCADA	SCREW NOZZLE PIPE STEAM QUIMIC NICKEL
I.895	TORNILLO FIJACION EMBUDO	FUNNEL FIXED SCREW
I.959	EMBOLO 40	PISTON 40
I.1065	FILTRO R101 MOKADOR	FILTER R101 MOKADOR
I.1114	BOQUILLA CAPUCCINO 3 AGUJEROS	CAPPUCCINO NOZZLE 3 WAYS
I.1130	TUERCA CON ARANDELA M5	NUT M5
I.1263	TUERCA BICONO 4	BICONE NUT 4
I.1264	BICONO 4	BICONE 4
I.1628	TUBO TEFLON 2x4 (70mm)	TEFLON PIPE 2x4x70 LARGE
I.2237	CJTO INTERCAMBIADOR INOX. 230V	THERMOBLOCK INOX. 230V
I.2238	CJTO. INTERCAMBIADOR INOX. 1000W 120V	WHOLE. THERMOBLOCK INOX. 1000W 120V
I.2258	BOMBA ULKA EP4 20 BAR 48W 230V	ULKA EP4 20 BAR 48W 230V PUMP
I.2259	BOMBA ULKA EP4 20 BAR 48W 120V	ULKA EP4 20 BAR 48W 120V PUMP
I.2285	RACORD CONEXION GRIFO	FITTING
I.2286	RACORD CONEXION INTERCAMBIADOR	FITTING
I.2300	EJE GRIFO VAPOR/AGUA NIQ. QUIMICO	EJE TAP STEAM/WATER
I.2301	CUERPO GRIFO VAPOR/AGUA NIQ. QUIMICO	BODY TAP STEAM/WATER
I.2302	TACO CIERRE GRIFO VITON 6.5X4mm	GASKET TAP VITON 6.5X4mm
I.2306	TERMOSTATO SEGURIDAD 190ºC	SAFETY THERMAL SWITCH 190ºC
I.2344	MUELLE VALVULA GRUPO INOX	THERMOBLOCK INOX SPRING
I.2350	PLACA IMPULSO INTERCAMBIADOR INOX 230V	PULSE CIRCUIT THERMOBLOCK INOX 230V
I.2351	PLACA IMPULSO INTERCAMBIADOR INOX 120V	PULSE CIRCUIT THERMOBLOCK INOX 120V
I.2303C	PROLONGACION CORTA GRIFO VAPOR/AGUA NIQ. QUIMICO	SUPPLEMENT CORTA TAP STEAM/WATER
PM.95	CJTO POMO NEGRO	BLACK HANDLE
PM.161	CJTO GRIFO DREAM 2012	WHOLE TAP DREAM 2012

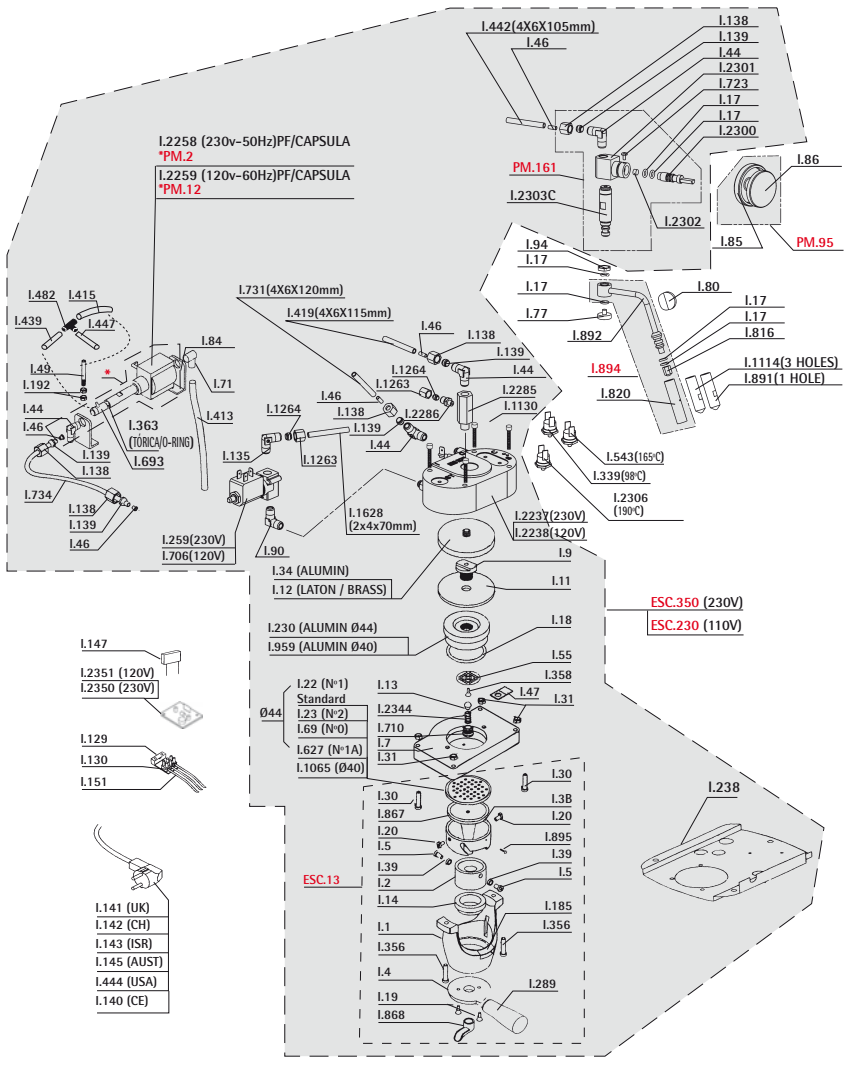

Grupo thermoblock Alu+Inox BASIC PF +09/2012 ■ BASIC PF Alu+ss Thermoblock Group +09/2012

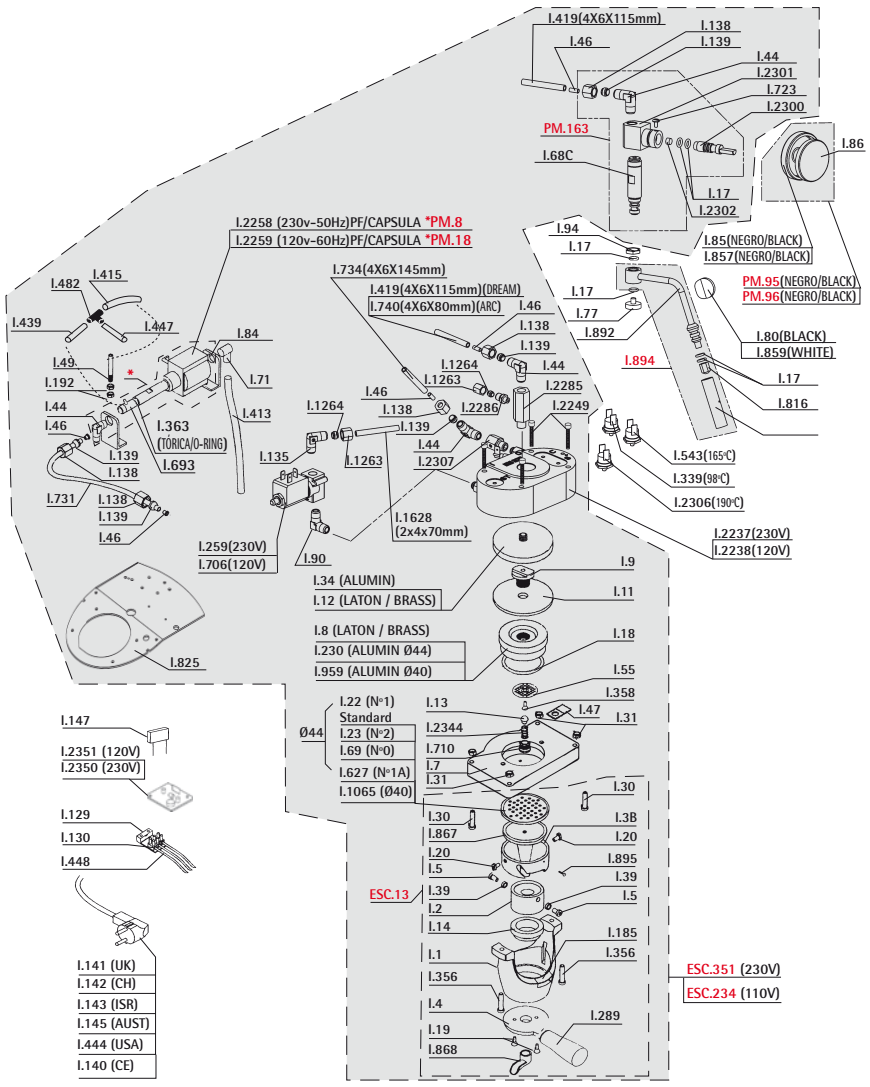

Ref.	Descripción	Description
I.1	BASE PORTA FIJO PULIDO	FIXED FILTERHOLDER BASE
I.2	VASTAGO ALUMINIO	ALUMINIUM ROD
I.3B	LEVA	LEVER
I.4	SOPORTE MANGO	HANDLE SUPPORT
I.5	PIVOTE LEVA INOX	BRASS LEVER PIVOT
I.7	CAMARA DE COMPRESION	COMPRESSION CHAMBER
I.9	CUERPO VALVULA RETENCION	RETENTION VALVE BODY
I.11	MEMBRANA SILICONA DIAM. 74	SILICONE MEMBRANE
I.12	TAPETA CAMARA LATON	BRASS CHAMBER LID
I.13	VALVULA SILICONA	SILICONE VALVE
I.14	CASQUILLO RODADURA	CAP
I.17	JUNTA TORICA	SILICONE RING
I.18	JUNTA CIALDA GRUPO	SILICONE RING
I.19	TORN.APRIETE SOPORT.MANGO	SCREW
I.20	TORNILLO GUIA	GUIDE SCREW
I.22	FILTRO CIALDA Nº1	Nº1 POD FILTER
I.23	FILTRO CIALDA Nº2	Nº2 POD FILTER
I.30	TORNILLO FIJACION INTERCAMB.	SCREW
I.31	TUERCA M5	NUT
I.34	TAPETA CAMARA ALUMINIO	ALUMINUM CHAMBER LID
I.39	RODILLO LEVA	LEVER ROLLER
I.44	RACORD CODO	RL BOIX FITTING
I.46	REFUERZO TUBO	PIPE REINFORCEMET
I.47	TERMINAL MASA	TERMINALE
I.49	TUBO CHIMENEA	CHIMNEY PIPE
I.55	DUCHA	SHOWER
I.68C	PROLONGACION GRIFO CORTA NIQ. QUIMICO	SHORT PROLONGATION
I.69	FILTRO CIALDA Nº0	Nº0 FILTER
I.71	PIPETA ASPIRACION	90º FITTING
I.77	FIJACION TUBO VAPOR CROMADO	PIPE STEAM SCREW
I.80	PROTECTOR TUBO VAPOR NEGRO	PROTECTOR STEAM PIPE
I.84	SOPORTE BOMBA 90º	PUMP SUPPORT
I.85	POMO GRIFO NEGRO	HANDLE
I.86	EMBELLECEDOR POMO INOX	INOX HANLE LID
I.90	RACOR CODO MACHO 1/8 LATON	FITTING
I.94	TUERCA APRIETE GRIFO	TAP NUT
I.99	TORNILLO M3x8 INOX	SCREW
I.129	RETENEDOR CABLE	TERMINAL WIRING
I.130	REGLETA 3 VIAS	TERMINAL BLOCK
I.135	RACOR CODO 13280 4 1/8	FITTING
I.138	TUERCA BICONO	NUT
I.138	TUERCA BICONO	NUT
I.139	BICONO DE 6	BICONE
I.140	CABLE RED EUROPEO	WIRING 230v
I.141	CABLE RED UK	WIRING UK
I.142	CABLE RED SUIZA	SWITZERLAND WIRING
I.143	CABLE RED ISRAEL	ISRAEL WIRING
I.145	CABLE RED AUSTRALIA	AUSTRALIAN WIRING
I.147	CONDENSADOR UL	CONDENSER
I.185	PROTECTOR PORTA FIJO	PROTECTOR
I.192	TUERCA LATON	NUT
I.230	EMBOLO ALUMINIO	PISTON WITH SHOWER
I.259	ELECTROV. 3 VIAS PASO 1.2 230V 1/8-1/8 0-15BAR	3 WAY SOLENOID
I.289	CJT.MANGO NEGRO	HANDLE WHOLE
I.339	TERMOSTATO 98º	98ºC THERMOSTAT
I.356	TORNILLO ALLEN M5x15 INOX	ALLEN SCREW
I.358	TORNILLO PORTADUCHA M4	M4 SCREW
I.363	C.INTERC.LATON+RESIST.110V	110VRESIST+BRASS THERM BODY
I.398	TUERCA AUTOBLOCANTE M3	NUT
I.413	TUBO SILICONA 5x8 (205mm)	SILICONE PIPE 5x8 (205mm)
I.444	CABLE RED USA SJTO	USA WIRING (SJTO)
I.447	TUBO SILICONA 4x7 (25mm)	SILICONE PIPE 4x7 (25mm)
I.448	CABLEADO BASIC PF / ARC FUN PF	ARC FUN FF/BASIC FF WIRING
I.482	TE PORTATUBOS	FITTING
I.543	TERMOSTATO 165º CERAMICO	165º CERAMIC THERMOSTAT
I.627	FILTRO CIALDA Nº1 A	POD FILTER 1A
I.693	VALVULA S2 MONTADA	ASSEMBLED S2 VALVE
I.706	ELECTROV. 3 VIAS PASO 1.5 120V 1/8-1/8 0-15BAR	120V 3 WAYS SOLENOID
I.710	TUERCA VALVULA RETENCION CON DUCHA	NUT
I.723	TORNILLO DIN 7985 M3 X 5 ZN	DIN 7985 M3 X 5 ZN SCREW
I.734	TUBO TEFLON 4x6 (145mm)	4x6 (145mm) TEFLON PIPE
I.740	TUBO TEFLON 4x6 (80mm)	4x6 (80mm) TEFLON PIPE
I.816	PIÑA VAPOR CON ROSCA	THREADED STEAM STEP
I.820	TUBO CAPPUCCINO	CAPPUCCINO STEEL PIPE
I.867	EMBUDO PLASTICO PF	PLASTIC FUNNEL PF
I.868	SALIDA PLASTICO PF	COFFEE SPOUT 1 WAY PLASTIC
I.892	TUBO VAPOR	PIPE STEAM
I.894	TUBO VAPOR BOQUILLA ROSCADA	SCREW NOZZLE PIPE STEAM QUIMIC NICKEL
I.895	TORNILLO FIJACION EMBUDO	FUNNEL FIXED SCREW
I.959	EMBOLO 40	PISTON 40
I.1065	FILTRO R101 MOKADOR	FILTER R101 MOKADOR
I.1130	TUERCA CON ARANDELA M5	NUT M5
I.1263	TUERCA BICONO 4	BICONE NUT 4
I.1264	BICONO 4	BICONE 4
I.1628	TUBO TEFLON 2x4 (70mm)	TEFLON PIPE 2x4x70 LARGE
I.2222	CABLE FUSIBLE 216ºC	STEAM WIRE - 216ºC
I.2237	CJTO INTERCAMBIADOR INOX. 230V	THERMOBLOCK INOX. 230V
I.2238	CJTO. INTERCAMBIADOR INOX. 1000W 120V	WHOLE. THERMOBLOCK INOX. 1000W 120V
I.2258	BOMBA ULKA EP4 20 BAR 48W 230V	ULKA EP4 20 BAR 48W 230V PUMP
I.2259	BOMBA ULKA EP4 20 BAR 48W 120V	ULKA EP4 20 BAR 48W 120V PUMP
I.2285	RACORD CONEXION GRIFO	FITTING
I.2286	RACORD CONEXION INTERCAMBIADOR	FITTING
I.2300	EJE GRIFO VAPOR/AGUA NIQ. QUIMICO	EJE TAP STEAM/WATER
I.2301	CUERPO GRIFO VAPOR/AGUA NIQ. QUIMICO	BODY TAP STEAM/WATER
I.2302	TACO CIERRE GRIFO VITON 6.5X4mm	GASKET TAP VITON 6.5X4mm
I.2304	SOPORTE GRIFO ARC/UNO	SUPPORT TAP ARC/UNO
I.2344	MUELLE VALVULA GRUPO INOX	THERMOBLOCK INOX SPRING
I.2350	PLACA IMPULSO INTERCAMBIADOR INOX 230V	PULSE CIRCUIT THERMOBLOCK INOX 230V
I.2351	PLACA IMPULSO INTERCAMBIADOR INOX 120V	PULSE CIRCUIT THERMOBLOCK INOX 120V
PM.95	CJTO POMO NEGRO	BLACK HANDLE
PM.162	CJTO GRIFO ARC/UNO 2012	WHOLE TAP ARC/UNO 2012

Grupo thermoblock Alu+Inox ARC PF +09/2012 ■ ARC PF Alu+ss Thermoblock Group +09/2012

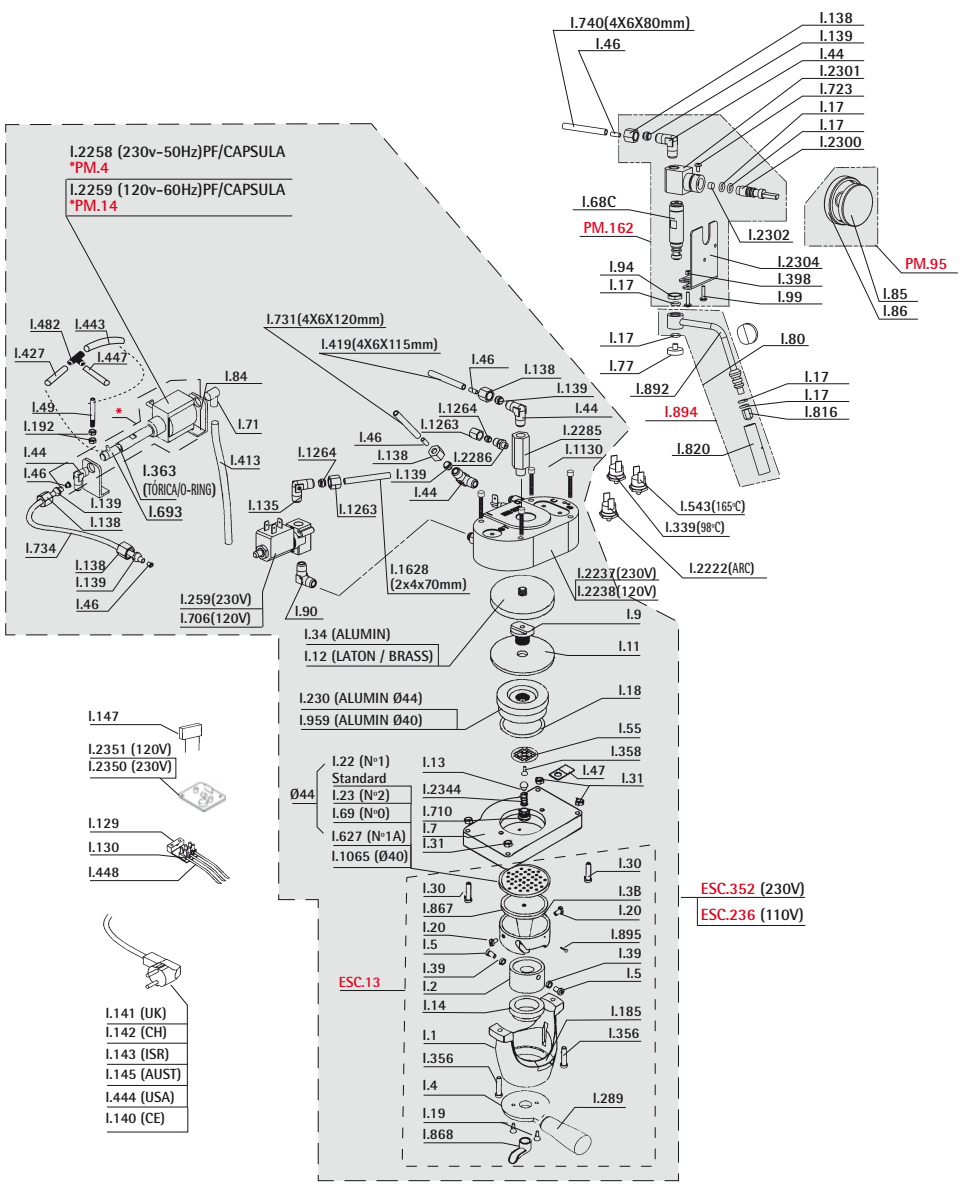

Ref.	Descripción	Description
I.1	BASE PORTA FIJO PULIDO	FIXED FILTERHOLDER BASE
I.2	VASTAGO ALUMINIO	ALUMINIUM ROD
I.3B	LEVA	LEVER
I.4	SOPORTE MANGO	HANDLE SUPPORT
I.5	PIVOTE LEVA INOX	BRASS LEVER PIVOT
I.7	CAMARA DE COMPRESION	COMPRESSION CHAMBER
I.8	EMBOLO LATON	BRASS PISTON
I.9	CUERPO VALVULA RETENCION	RETENTION VALVE BODY
I.11	MEMBRANA SILICONA DIAM. 74	SILICONE MEMBRANE
I.12	TAPETA CAMARA LATON	BRASS CHAMBER LID
I.13	VALVULA SILICONA	SILICONE VALVE
I.14	CASQUILLO RODADURA	CAP
I.17	JUNTA TORICA	SILICONE RING
I.18	JUNTA CIALDA GRUPO	SILICONE RING
I.19	TORN.APRIETE SOPORT.MANGO	SCREW
I.20	TORNILLO GUIA	GUIDE SCREW
I.22	FILTRO CIALDA Nº1	Nº1 POD FILTER
I.23	FILTRO CIALDA Nº2	Nº2 POD FILTER
I.30	TORNILLO FIJACION INTERCAMB.	SCREW
I.31	TUERCA M5	NUT
I.34	TAPETA CAMARA ALUMINIO	ALUMINUM CHAMBER LID
I.39	RODILLO LEVA	LEVER ROLLER
I.44	RACORD CODO	RL BOIX FITTING
I.46	REFUERZO TUBO	PIPE REINFORCEMET
I.47	TERMINAL MASA	TERMINALE
I.49	TUBO CHIMENEA	CHIMNEY PIPE
I.55	DUCHA	SHOWER
I.68C	PROLONGACION GRIFO CORTA NIQ. QUIMICO	SHORT PROLONGATION
I.69	FILTRO CIALDA Nº0	Nº0 FILTER
I.71	PIPETA ASPIRACION	90º FITTING
I.77	FIJACION TUBO VAPOR CROMADO	PIPE STEAM SCREW
I.80	PROTECTOR TUBO VAPOR NEGRO	PROTECTOR STEAM PIPE
I.84	SOPORTE BOMBA 90º	PUMP SUPPORT
I.85	POMO GRIFO NEGRO	HANDLE
I.86	EMBELLECEDOR POMO INOX	INOX HANLE LID
I.90	RACOR CODO MACHO 1/8 LATON	FITTING
I.94	TUERCA APRIETE GRIFO	TAP NUT
I.129	RETENEDOR CABLE	TERMINAL WIRING
I.130	REGLETA 3 VIAS	TERMINAL BLOCK
I.135	RACOR CODO 13280 4 1/8	FITTING
I.138	TUERCA BICONO	NUT
I.139	BICONO DE 6	BICONE
I.140	CABLE RED EUROPEO	WIRING 230v
I.141	CABLE RED UK	WIRING UK
I.142	CABLE RED SUIZA	SWITZERLAND WIRING
I.143	CABLE RED ISRAEL	ISRAEL WIRING
I.145	CABLE RED AUSTRALIA	AUSTRALIAN WIRING
I.147	CONDENSADOR UL	CONDENSER
I.185	PROTECTOR PORTA FIJO	PROTECTOR
I.192	TUERCA LATON	NUT
I.230	EMBOLO ALUMINIO	PISTON WITH SHOWER
I.259	ELECTROV. 3 VIAS PASO 1.2 230V 1/8-1/8 0-15BAR	3 WAY SOLENOID
I.289	CJT.MANGO NEGRO	HANDLE WHOLE
I.339	TERMOSTATO 98º	98ºC THERMOSTAT
I.356	TORNILLO ALLEN M5x15 INOX	ALLEN SCREW
I.358	TORNILLO PORTADUCHA M4	M4 SCREW
I.363	C.INTERC.LATON+RESIST.110V	110VRESIST+BRASS THERM BODY
I.413	TUBO SILICONA 5x8 (205mm)	SILICONE PIPE 5x8 (205mm)
I.419	TUBO TEFLON 4x6 (115mm)	TEFLON PIPE 4x6 (115mm)
I.427	TUBO SILICONA 4x7 (145mm)	SILICONE PIPE 4x7 (145mm)
I.443	TUBO SILICONA 4x7 (90mm)	SILICONE PIPE 4x7 (90mm)
I.444	CABLE RED USA SJTO	USA WIRING (SJTO)
I.447	TUBO SILICONA 4x7 (25mm)	SILICONE PIPE 4x7 (25mm)
I.448	CABLEADO BASIC PF / ARC FUN PF	ARC FUN FF/BASIC FF WIRING
I.482	TE PORTATUBOS	FITTING
I.543	TERMOSTATO 165º CERAMICO	165º CERAMIC THERMOSTAT
I.627	FILTRO CIALDA Nº1 A	POD FILTER 1A
I.693	VALVULA S2 MONTADA	ASSEMBLED S2 VALVE
I.706	ELECTROV. 3 VIAS PASO 1.5 120V 1/8-1/8 0-15BAR	120V 3 WAYS SOLENOID
I.710	TUERCA VALVULA RETENCION CON DUCHA	NUT
I.723	TORNILLO DIN 7985 M3 X 5 ZN	DIN 7985 M3 X 5 ZN SCREW
I.731	TUBO TEFLON 4x6 (120mm)	4x6 (120mm) TEFLON PIPE
I.734	TUBO TEFLON 4x6 (145mm)	4x6 (145mm) TEFLON PIPE
I.740	TUBO TEFLON 4x6 (80mm)	4x6 (80mm) TEFLON PIPE
I.816	PIÑA VAPOR CON ROSCA	THREADED STEAM STEP
I.820	TUBO CAPPUCCINO	CAPPUCCINO STEEL PIPE
I.825	CHAPA MECANISMO BASIC	BASIC MECHANISME PLATE
I.857	POMO BLANCO	WHITE HANDLE TAP
I.859	PROTECTOR TUBO VAPOR BLANCO	STEAM PIPE WHITE PROTECTOR
I.867	EMBUDO PLASTICO PF	PLASTIC FUNNEL PF
I.868	SALIDA PLASTICO PF	COFFEE SPOUT 1 WAY PLASTIC
I.892	TUBO VAPOR	PIPE STEAM
I.894	TUBO VAPOR BOQUILLA ROSCADA	SCREW NOZZLE PIPE STEAM QUIMIC NICKEL
I.895	TORNILLO FIJACION EMBUDO	FUNNEL FIXED SCREW
I.959	EMBOLO 40	PISTON 40
I.1065	FILTRO R101 MOKADOR	FILTER R101 MOKADOR
I.1263	TUERCA BICONO 4	BICONE NUT 4
I.1264	BICONO 4	BICONE 4
I.1628	TUBO TEFLON 2x4 (70mm)	TEFLON PIPE 2x4x70 LARGE
I.2237	CJTO INTERCAMBIADOR INOX. 230V	THERMOBLOCK INOX. 230V
I.2238	CJTO. INTERCAMBIADOR INOX. 1000W 120V	WHOLE. THERMOBLOCK INOX. 1000W 120V
I.2249	TORNILLO ALLEN M5X50 DIN912 INOX	SCREW
I.2258	BOMBA ULKA EP4 20 BAR 48W 230V	ULKA EP4 20 BAR 48W 230V PUMP
I.2259	BOMBA ULKA EP4 20 BAR 48W 120V	ULKA EP4 20 BAR 48W 120V PUMP
I.2285	RACORD CONEXION GRIFO	FITTING
I.2286	RACORD CONEXION INTERCAMBIADOR	FITTING
I.2300	EJE GRIFO VAPOR/AGUA NIQ. QUIMICO	EJE TAP STEAM/WATER
I.2301	CUERPO GRIFO VAPOR/AGUA NIQ. QUIMICO	BODY TAP STEAM/WATER
I.2302	TACO CIERRE GRIFO VITON 6.5X4mm	GASKET TAP VITON 6.5X4mm
I.2306	TERMOSTATO SEGURIDAD 190ºC	SAFETY THERMAL SWITCH 190ºC
I.2307	PROLONGACION GRUPO BASIC	BASIC COFFEE GROUP EXTENSION
I.2344	MUELLE VALVULA GRUPO INOX	THERMOBLOCK INOX SPRING
I.2350	PLACA IMPULSO INTERCAMBIADOR INOX 230V	PULSE CIRCUIT THERMOBLOCK INOX 230V
I.2351	PLACA IMPULSO INTERCAMBIADOR INOX 120V	PULSE CIRCUIT THERMOBLOCK INOX 120V
PM.95	CJTO POMO NEGRO	BLACK HANDLE
PM.96	CJTO POMO BLANCO	WHITE HANDLE
PM.163	CJTO GRIFO BASIC 2012	WHOLE TAP BASIC 2012

Grupo Caldera Dream -10/2009 ■ Dream Boiler Group -10/2009

Ref.	Descripción	Description
C...32	DUCHA	SHOWER
ESC..4	CONJUNTO CALDERA DREAM 230V	230V DREAM BOILER WHOLE
ESC.10	CONJUNTO CALDERA DREAM 110V	110V DREAM BOILER WHOLE
I...13	VALVULA SILICONA INTERC.	SILICONE VALVE
I...15	MUELLE VALVULA RETENCION	RETENTION VALVE SPRING
I...17	TORICA UNION INTERCAMB. SILICONA	SILICONE RING
I...18	JUNTA TORICA CIALDA	RING
I...21	TORNILLO INOX APRIETE P.F	INOX SCREW
I...31	TUERCA FIJACION INTERCAMBIADOR	NUT
I...43	TERMOSTATO 140º	140º THERMOSTAT
I...44	RACOR CODO	ELBOW FITTING
I...45	RACOR RECTO	STRAIGHT FITTING
I...46	REFUERZO TUBO	PIPE REINFORCEMET
I...48	CAMPANA GRUPO LATON	BRASS GROUP BELL
I...49	TUBO CHIMENEA	PIPE
I...50	TORICA CALDERA SILICONA	SILICONE BOILER GASKET
I...53	PORTADUCHA	BRASS SHOWERHOLDER
I...54	JUNTA PORTADUCHA SILICONA	SILICONE GASKET
I...55	DUCHA	SHOWER
I...57	JUNTA PORTA	HOLDERGASKET
I...58	TORNILLO BRIDA FUSIBLE	SCREW
I...66	CHAPA SOPORTE CALDERA	BOILER PLATE
I...68	GRIFO VAPOR/AGUA DREAM	DREAM STEAM/WATER TAP
I...71	PIPETA ASPIRACION	SUCTION FITTING
I...76	EJE GRIFO	TAP ROD
I...77	FIJACION TUBO VAPOR	PIPE STEAM FIXATION
I...80	PROTECTOR TUBO VAPOR	STEAM PIPE PROTECTOR
I...81	LEVA ACCIONAMIENTO	LEVER
I...83	TUBO VAPOR CORTO	SHORT STEAM PIPE
I...84	SOPORTE BOMBA 90º	90º PUMP SUPPORT
I...85	POMO GRIFO	TAP HANDLE
I...86	EMBELLECEDOR POMO INOX	INOX HANLE LID
I...89	MUELLE POMO	HANDLE SPRING
I...91	JUNTA TORICA EJE	SILICONE RING
I...93	SUPLEMENTO GRIFO	TAP SUPPLEMENT
I...94	TUERCA APRIETE GRIFO	TAP NUT
I..129	RETENEDOR CABLE	WIRING TERMINAL
I..130	REGLETA 3 VIAS	3 WAYS CONNECTOR
I..132	TORNILLO FIJACION BASE MECAN. DREAM	DREAM FIXATION SCREW
I..138	TUERCA BICONO	BICONE NUT
I..139	BICONO 6 mm	BICONE
I..140	CABLE RED	ELECTRIC WIRING
I..141	CABLE RED UK	UK WIRING
I..142	CABLE RED SUIZA	SWITZERLAND WIRING
I..143	CABLE RED ISRAEL	ISRAEL WIRING
I..145	CABLE RED AUSTRALIA	AUSTRALIAN WIRING
I..147	CONDENSADOR	CONDENSER
I..175	RACOR RECTO	STRAIGHT FITTING
I..238	CHAPA GRUPO DREAM	DREAM GROUP PLATE
I..277	SUPLEMENTO CAFE MOLIDO	GROUND COFFEE SUPLEMENT
I..292	BOMBA ULKA EP-5 230V PLASTICO	ULKA EP-5 230V PUMP
I..304	TORNILLO DUCHA	SHOWER SCREW
I..358	TORNILLO PORTADUCHA INOX	INOX SCREW
I..365	TAPA CALDERA + RESIST. 110V	110V RESIST.+ BOILER LID
I..366	TAPA CALDERA + RESIST. 220V	220V RESIST.+BOILER LID
I..374	TERMOSTATO 100º	100º THERMOSTAT
I..413	TUBO SILICONA 5x8 (205MM)	SILICONE PIPE 5x8 (205MM)
I..416	TUBO TEFLON 4x6 (63mm)	TEFLON PIPE 4x6 (63mm)
I..419	TUBO TEFLON 4x6 (115 mm)	TEFLON PIPE 4x6 (115 mm)
I..443	TUBO SILICONA 4x7 (90mm)	SILICONE PIPE 4x7 (90mm)
I..444	CABLE RED USA	USA WIRING
I..675	BOMBA 110V 52W PLASTICO	110V 52W PLASTIC PUMP
I..693	VALVULA S-2 REFORZADA	S-2 REINFORCED VALVE
I.1150	CABLE FUSIBLE DREAM	DREAM FUSE WIRING
KIT..1	KIT PASTILLA - MOLIDO	POD - GROUND KIT
MI..57	TORNILLO	SCREW
PM..95	CONJUNTO POMO NEGRO	BLACK HANDLE WHOLE

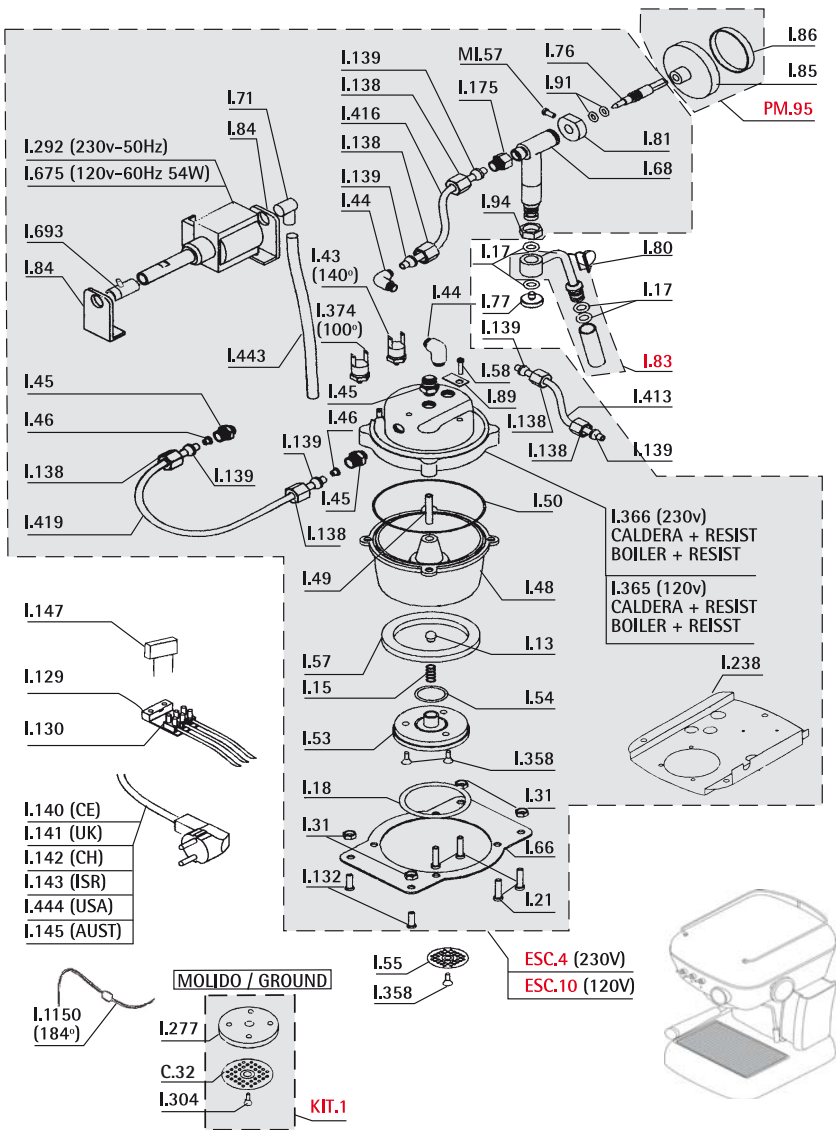

Grupo Caldera Dream +10/2009 ■ Dream Boiler Group +10/2009

Ref.	Descripción	Description
C...32	DUCHA	SHOWER
ESC.36	GRUPO CALDERA EV OPV DREAM 230V	BOILER GROUP EV OPV DREAM 230V
ESC.41	GRUPO CALDERA DREAM OPV 230V	230V OPV DREAM BOILER GROUP
ESC136	GRUPO CALDERA EV OPV DREAM 120V	BOILER GROUP EV OPV DREAM 230V
I...17	TORICA UNION INTERCAMB. SILICONA	SILICONE RING
I...18	JUNTA TORICA CIALDA	RING
I...21	TORNILLO INOX APRIETE P.F	INOX SCREW
I...43	TERMOSTATO 140º	140º THERMOSTAT
I...45	RACOR RECTO	STRAIGHT FITTING
I...46	REFUERZO TUBO	PIPE REINFORCEMET
I...48	CAMPANA GRUPO LATON	BRASS GROUP BELL
I...50	TORICA CALDERA SILICONA	SILICONE BOILER GASKET
I...53	PORTADUCHA	BRASS SHOWERHOLDER
I...54	JUNTA PORTADUCHA SILICONA	SILICONE GASKET
I...55	DUCHA	SHOWER
I...57	JUNTA PORTA	HOLDERGASKET
I...58	TORNILLO BRIDA FUSIBLE	SCREW
I...66	CHAPA SOPORTE CALDERA	BOILER PLATE
I...71	PIPETA ASPIRACION	SUCTION FITTING
I...76	EJE GRIFO	TAP ROD
I...77	FIJACION TUBO VAPOR	PIPE STEAM FIXATION
I...80	PROTECTOR TUBO VAPOR	STEAM PIPE PROTECTOR
I...84	SOPORTE BOMBA 90º	90º PUMP SUPPORT
I...85	POMO GRIFO	TAP HANDLE
I...86	EMBELLECEDOR POMO INOX	INOX HANLE LID
I...89	MUELLE POMO	HANDLE SPRING
I...90	RACOR CODO	ELBOW FITTING
I...91	JUNTA TORICA EJE	SILICONE RING
I...94	TUERCA APRIETE GRIFO	TAP NUT
I..129	RETENEDOR CABLE	WIRING TERMINAL
I..130	REGLETA 3 VIAS	3 WAYS CONNECTOR
I..135	RACOR CODO	ELBOW FITTING
I..138	TUERCA BICONO	BICONE NUT
I..139	BICONO 6 mm	BICONE
I..140	CABLE RED	ELECTRIC WIRING
I..141	CABLE RED UK	UK WIRING
I..142	CABLE RED SUIZA	SWITZERLAND WIRING
I..143	CABLE RED ISRAEL	ISRAEL WIRING
I..145	CABLE RED AUSTRALIA	AUSTRALIAN WIRING
I..147	CONDENSADOR	CONDENSER
I..150	CABLEADO DREAM CALDERA	DREAM BOILER WIRING
I..238	CHAPA GRUPO DREAM	DREAM GROUP PLATE
I..259	ELECTROVALVULA PASO 1.5 220V	3 WAY SOLENOID
I..273	ELECTROVALVULA 3 VIAS 110V	110V 3 WAYS SOLENOID
I..277	SUPLEMENTO CAFE MOLIDO	GROUND COFFEE SUPLEMENT
I..292	BOMBA ULKA EP-5 230V PLASTICO	ULKA EP-5 230V PUMP
I..304	TORNILLO DUCHA	SHOWER SCREW
I..358	TORNILLO PORTADUCHA INOX	INOX SCREW
I..374	TERMOSTATO 100º	100º THERMOSTAT
I..413	TUBO SILICONA 5x8 (205MM)	SILICONE PIPE 5x8 (205MM)
I..415	TUBO SILICONA 4x7 (65mm)	SILICONE PIPE 4x7 (65mm)
I..427	TUBO SILICONA 4x7 (145mm)	SILICONE PIPE 4x7 (145mm)
I..430	TORNILLO M5x6	M5x6 SCREW
I..442	TUBO TEFLON 4x6 (105mm)	TEFLON PIPE 4x6 (105mm)
I..444	CABLE RED USA	USA WIRING
I..482	TE PORTATUBOS	FITTING
I..675	BOMBA 110V 52W PLASTICO	110V 52W PLASTIC PUMP
I..68A	CUERPO GRIFO	TAP BODY
I..68C	PROLONGADOR GRIFO CORTO	SHORT TAP EXTENSION
I..693	VALVULA S-2 REFORZADA	S-2 REINFORCED VALVE
I..723	TORNILLO DIN 7985 M3x5 ZN	SCREW DIN 7985 M3x5 ZN
I..816	PINA VAPOR CON ROSCA	THREADED STEAM STEP
I..820	TUBO CAPPUCCINO STEEL	CAPPUCCINO STEEL PIPE
I..891	BOQUILLA CAPPUCCINO ROSCADA	NUT CAPPUCCINO NOZZLE
I..892	TUBO VAPOR	PIPE STEAM
I..894	TUBO VAPOR STEEL	SCREW NOZZLE PIPE STEAM QUIMIC
I.1078	TUBO TEFLON 4X6 (200mm)	TEFLON PIPE 4X6 (200mm)
I.1114	BOQUILLA CAPPUCCINO 3 SALIDAS	CAPPUCCINO NOZZLE 3 WAYS
I.1117	CJTO VALVULA EXPANSION	EXPANSION VALVES GROUP
I.1122	CUERPO DESCARGA	DRAIN BODY
I.1123	TUBO DESCARGA	OUTLET PIPE
I.1137	RACORD CRUZ 1/8	CROSS FITTING 1/8
I.1142	TUBO TEFLON 2x4 (100MM)	2x4 (100MM) TEFLON PIPE
I.1150	CABLE FUSIBLE DREAM	DREAM FUSE WIRING
I.1165	TAPA CALDERA OPV RES. 230V 900W	BOILER OPV + RESISTANCE LID 230V
I.1166	TAPA CALDERA OPV RES. 120V 900W	BOILER OPV + RESISTANCE LID 120V
I.1257	RACORD ELECTROVALVULA	SOLENOID FITTING
I.1263	TUERCA BICONO 4	BICONE NUT 4
I.1264	BICONO 4	BICONE 4
I.2212	TUBO CHIMENEA UP	PIPE
KIT..1	KIT PASTILLA - MOLIDO	POD - GROUND KIT
MI..84	ARANDELA ELASTICA	WASHER
PM...1	CONJUNTO BOMBA DREAM PM 220V	220V PM DREAM PUMP WHOLE
PM..11	CONJUNTO BOMBA DREAM PM 110V	110V PM DREAM PUMP WHOLE
PM..23	GRIFO BASIC	BASIC TAP
PM..95	CONJUNTO POMO NEGRO	BLACK HANDLE WHOLE

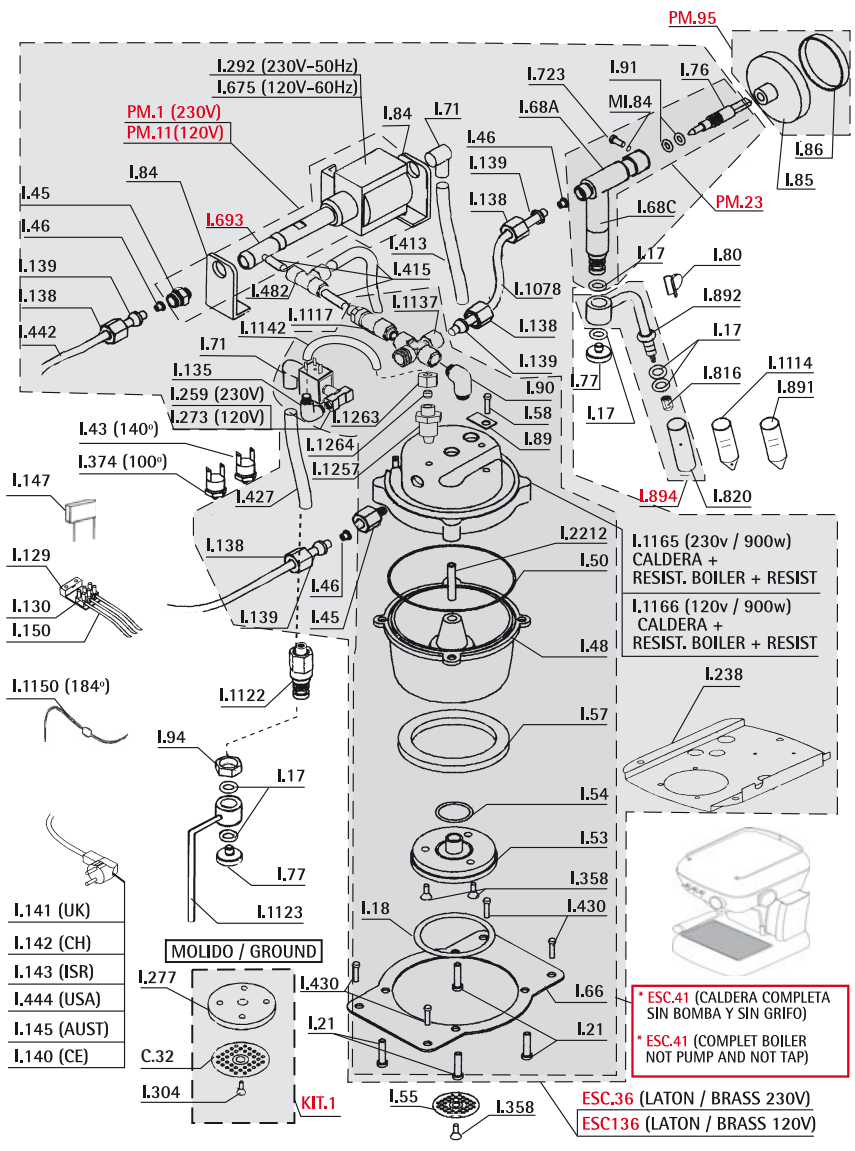

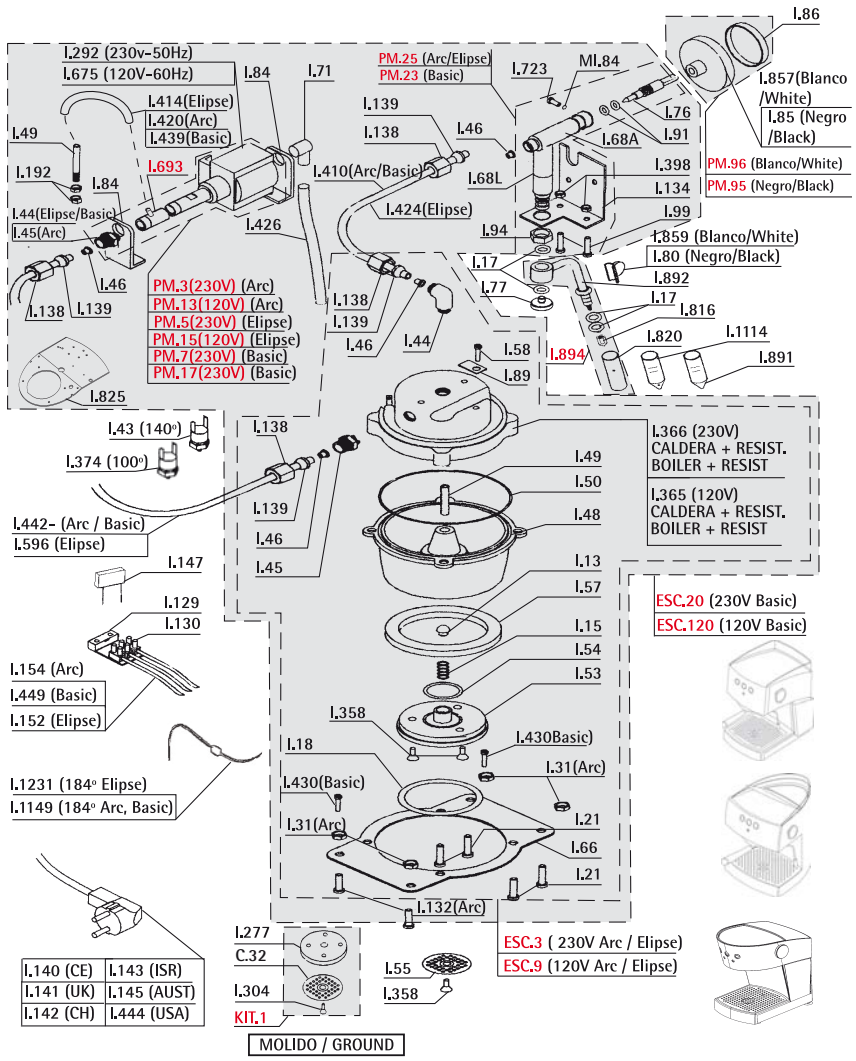

REF.	DESCRIPCIÓN	DESCRIPTION
C...32	DUCHA	SHOWER
ESC..3	CONJUNTO CALD. ARC/ELIPSE 230V	230V ARC/ELIPSE BOILER WHOLE
ESC..9	CONJUNTO CALD.ARC/ELIPSE 110V	110V ARC/ELIPSE BOILER WHOLE
ESC.20	GRUPO CALDERA BASIC 230V	BOILER GROUP BASIC 230V
ESC120	GRUPO CALDERA BASIC 120V	BOILER GROUP BASIC 120V
I...13	VALVULA SILICONA INTERC.	SILICONE VALVE
I...15	MUELLE VALVULA RETENCION	RETENTION VALVE SPRING
I...17	TORICA UNION INTERCAMB. SILICONA	SILICONE RING
I...18	JUNTA TORICA CIALDA	RING
I...21	TORNILLO INOX APRIETE PF	INOX SCREW
I...31	TUERCA FIJACION INTERCAMB	NUT
I...43	TERMOSTATO 140º	140º THERMOSTAT
I...44	RACOR CODO	ELBOW FITTING
I...45	RACOR RECTO	STRAIGHT FITTING
I...46	REFUERZO TUBO	PIPE REINFORCEMET
I...48	CAMPANA GRUPO LATON	BRASS GROUP BELL
I...49	TUBO CHIMENEA	PIPE
I...50	TORICA CALDERA SILICONA	SILICONE BOILER GASKET
I...53	PORTADUCHA	BRASS SHOWERHOLDER
I...54	JUNTA PORTADUCHA SILICONA	SILICONE GASKET
I...55	DUCHA	SHOWER
I...57	JUNTA PORTA	HOLDERGASKET
I...58	TORNILLO BRIDA FUSIBLE	SCREW
I...66	CHAPA SOPORTE CALDERA	BOILER PLATE
I...71	PIPETA ASPIRACION	SUCTION FITTING
I...76	EJE GRIFO	TAP ROD
I...77	FIJACION TUBO VAPOR	PIPE STEAM FIXATION
I...80	PROTECTOR TUBO VAPOR	STEAM PIPE PROTECTOR
I...84	SOPORTE BOMBA 90º	90º PUMP SUPPORT
I...85	POMO GRIFO	TAP HANDLE
I...86	EMBELLECEDOR POMO INOX	INOX HANLE LID
I...89	MUELLE POMO	HANDLE SPRING
I...91	JUNTA TORICA EJE	SILICONE RING
I...94	TUERCA APRIETE GRIFO	TAP NUT
I...99	TORNILLO SOPORTE GRIFO INOX	TAP SUPPORT INOX SCREW
I..129	RETENEDOR CABLE	WIRING TERMINAL
I..130	REGLETA 3 VIAS	3 WAYS CONNECTOR
I..132	TORNILLO FIJACION BASE MECAN. DREAM	DREAM FIXATION SCREW
I..134	SOPORTE GRIFO	TAP SUPPORT
I..138	TUERCA BICONO	BICONE NUT
I..139	BICONO 6 mm	BICONE
I..140	CABLE RED	ELECTRIC WIRING
I..141	CABLE RED UK	UK WIRING
I..142	CABLE RED SUIZA	SWITZERLAND WIRING
I..143	CABLE RED ISRAEL	ISRAEL WIRING
I..145	CABLE RED AUSTRALIA	AUSTRALIAN WIRING
I..147	CONDENSADOR	CONDENSER
I..152	CABLEADO ELIPSE CALDERA	ELIPSE/BOILER WIRING
I..154	CABLE ARC CALDERA	ARC BOILER WIRING
I..192	TUERCA LATON	BRASS NUT
I..277	SUPLEMENTO CAFE MOLIDO	GROUND COFFEE SUPLEMENT
I..292	BOMBA ULKA EP-5 230V PLASTICO	ULKA EP-5 230V PUMP
I..304	TORNILLO DUCHA	SHOWER SCREW
I..358	TORNILLO PORTADUCHA INOX	INOX SCREW
I..365	TAPA CALDERA + RESIST. 110V	110V RESIST.+ BOILER LID
I..366	TAPA CALDERA + RESIST. 220V	220V RESIST.+BOILER LID
I..374	TERMOSTATO 100º	100º THERMOSTAT
I..398	TUERCA AUTOBLOCANTE M-3	M-3 AUTOBLOC NUT
I..410	TUBO TEFLON 4x6 (85MM)	TEFLON PIPE 4x6 (85MM)
I..414	TUBO SILICONA 4x7 (200MM)	SILICONE PIPE 4x7 (200MM)
I..420	TUBO SILICONA 4x7 (125mm)	SILICONE PIPE 4x7 (125mm)
I..424	TUBO TEFLON 4x6 (56mm)	TEFLON PIPE 4x6 (56mm)
I..426	TUBO SILICONA 5x8 (370mm)	SILICONE PIPE 5x8 (370mm)
I..430	TORNILLO M5x6	M5x6 SCREW
I..439	TUBO SILICONA 4x7 (100mm)	SILICONE PIPE 4x7 (100mm)
I..442	TUBO TEFLON 4x6 (105mm)	TEFLON PIPE 4x6 (105mm)
I..444	CABLE RED USA	USA WIRING
I..449	CABLEADO ARC COLOR CALDER	ARC COLOUR BOILER WIRING
I..596	TUBO TEFLON 4x6 (65mm)	TEFLON PIPE 4x6 (65MM)
I..675	BOMBA 110V 52W PLASTICO	110V 52W PLASTIC PUMP
I..68A	CUERPO GRIFO	TAP BODY
I..68L	PROLONGADOR GRIFO LARGO	LONG TAP EXTENSION
I..693	VALVULA S-2 REFORZADA	S-2 REINFORCED VALVE
I..723	TORNILLO DIN 7985 M3x5 ZN	SCREW DIN 7985 M3x5 ZN
I..816	PIÑA VAPOR CON ROSCA	THREADED STEAM STEP
I..820	TUBO CAPPUCCINO STEEL	CAPPUCCINO STEEL PIPE
I..825	CHAPA MECANISMO BASIC	BASIC MECHANISME PLATE
I..857	POMO GRIFO BLANCO	WHITE HANDLE TAP
I..859	PROTECTOR TUBO VAPOR BLANCO	STEAM PIPE WHITE PROTECTOR
I..891	BOQUILLA CAPPUCCINO ROSCADA	NUT CAPPUCCINO NOZZLE
I..892	TUBO VAPOR	PIPE STEAM
I..894	TUBO VAPOR STEEL	SCREW NOZZLE PIPE STEAM QUIMIC
I.1114	BOQUILLA CAPPUCCINO 3 SALIDAS	CAPPUCCINO NOZZLE 3 WAYS
I.1149	CABLE FUSIBLE ARC BASIC PF	ARC/BASIC PF FUSE WIRING
I.1231	CABLE FUSIBLE ELIPSE PF	ELIPSE PF FUSE WIRING
KIT..1	KIT PASTILLA - MOLIDO	POD - GROUND KIT
MI..84	ARANDELA ELASTICA	WASHER
PM...3	CONJUNTO BOMBA ARC PM 220V	220V PM ARC PUMP WHOLE
PM...5	CONJUNTO BOMBA ELIPSE PM 220V	220V PM ELIPSE PUMP WHOLE
PM...7	CONJUNTO BOMBA BASIC PM 220V	220V PM BASIC PUMP WHOLE
PM..13	CONJUNTO BOMBA ARC PM 110V	110V PM ARC PUMP WHOLE
PM..15	CONJUNTO BOMBA ELIPSE PM 110V	110V PM ELIPSE PUMP WHOLE
PM..17	CONJUNTO BOMBA BASIC PM 110V	110V PM BASIC PUMP WHOLE
PM..23	GRIFO BASIC	BASIC TAP
PM..25	GRIFO ARC/ELIPSE/UNO	ARC/ELIPSE/UNO TAP
PM..95	CONJUNTO POMO NEGRO	BLACK HANDLE WHOLE
PM..96	CONJUNTO POMO BLANCO	WHITE HANDLE WHOLE

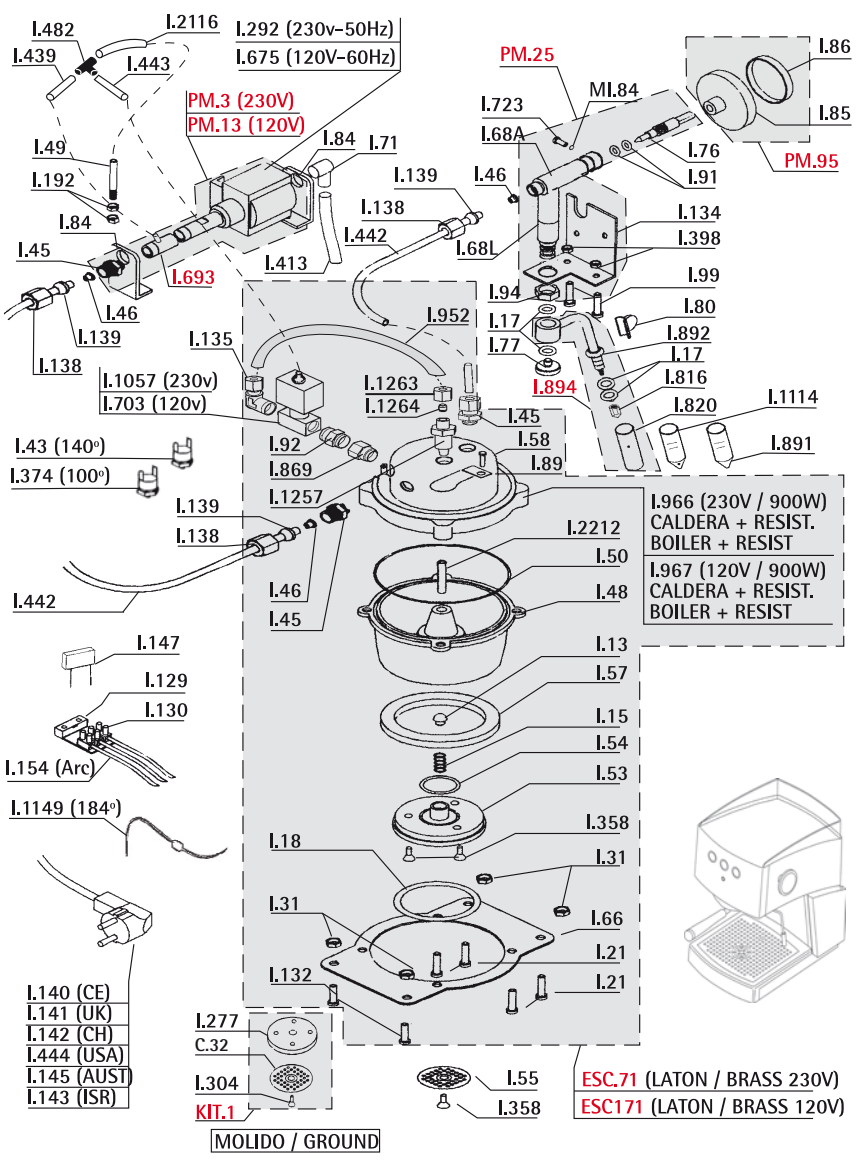

REF.	DESCRIPCIÓN	DESCRIPTION
C...32	DUCHA	SHOWER
ESC.71	GRUPO CALDERA EV ARC 230V	BOILER GROUP EV ARC 230V
ESC171	GRUPO CALDERA EV ARC 120V	BOILER GROUP EV ARC 120V
I...13	VALVULA SILICONA INTERC.	SILICONE VALVE
I...15	MUELLE VALVULA RETENCION	RETENTION VALVE SPRING
I...17	TORICA UNION INTERCAMB. SILICONA	SILICONE RING
I...18	JUNTA TORICA CIALDA	RING
I...21	TORNILLO INOX APRIETE P.F	INOX SCREW
I...31	TUERCA FIJACION INTERCAMB	NUT
I...43	TERMOSTATO 140º	140º THERMOSTAT
I...45	RACOR RECTO	STRAIGHT FITTING
I...46	REFUERZO TUBO	PIPE REINFORCEMET
I...48	CAMPANA GRUPO LATON	BRASS GROUP BELL
I...49	TUBO CHIMENEA	PIPE
I...50	TORICA CALDERA SILICONA	SILICONE BOILER GASKET
I...53	PORTADUCHA	BRASS SHOWERHOLDER
I...54	JUNTA PORTADUCHA SILICONA	SILICONE GASKET
I...55	DUCHA	SHOWER
I...57	JUNTA PORTA	HOLDERGASKET
I...58	TORNILLO BRIDA FUSIBLE	SCREW
I...66	CHAPA SOPORTE CALDERA	BOILER PLATE
I...71	PIPETA ASPIRACION	SUCTION FITTING
I...76	EJE GRIFO	TAP ROD
I...77	FIJACION TUBO VAPOR	PIPE STEAM FIXATION
I...80	PROTECTOR TUBO VAPOR	STEAM PIPE PROTECTOR
I...84	SOPORTE BOMBA 90º	90º PUMP SUPPORT
I...85	POMO GRIFO	TAP HANDLE
I...86	EMBELLECEDOR POMO INOX	INOX HANLE LID
I...89	MUELLE POMO	HANDLE SPRING
I...91	JUNTA TORICA EJE	SILICONE RING
I...92	MACHON	FITTING MALE
I...94	TUERCA APRIETE GRIFO	TAP NUT
I...99	TORNILLO SOPORTE GRIFO INOX	TAP SUPPORT INOX SCREW
I..129	RETENEDOR CABLE	WIRING TERMINAL
I..130	REGLETA 3 VIAS	3 WAYS CONNECTOR
I..132	TORN.FIJ.BASE MECAN.DREAM	DREAM FIXATION SCREW
I..134	SOPORTE GRIFO	TAP SUPPORT
I..135	RACOR CODO	ELBOW FITTING
I..138	TUERCA BICONO	BICONE NUT
I..139	BICONO 6 mm	BICONE
I..140	CABLE RED	ELECTRIC WIRING
I..141	CABLE RED UK	UK WIRING
I..142	CABLE RED SUIZA	SWITZERLAND WIRING
I..143	CABLE RED ISRAEL	ISRAEL WIRING
I..145	CABLE RED AUSTRALIA	AUSTRALIAN WIRING
I..147	CONDENSADOR	CONDENSER
I..154	CABLE ARC CALDERA	ARC BOILER WIRING
I..192	TUERCA LATON	BRASS NUT
I..277	SUPLEMENTO CAFE MOLIDO	GROUND COFFEE SUPLEMENT
I..292	BOMBA ULKA EP-5 230V PLASTICO	ULKA EP-5 230V PUMP
I..304	TORNILLO DUCHA	SHOWER SCREW
I..358	TORNILLO PORTADUCHA INOX	INOX SCREW
I..374	TERMOSTATO 100º	100º THERMOSTAT
I..398	TUERCA AUTOBLOCANTE M-3	M-3 AUTOBLOC NUT
I..413	TUBO SILICONA 5x8 (205mm)	SILICONE PIPE 5x8 (205MM)
I..439	TUBO SILICONA 4x7 (100mm)	SILICONE PIPE 4x7 (100mm)
I..442	TUBO TEFLON 4x6 (105mm)	TEFLON PIPE 4x6 (105mm)
I..443	TUBO SILICONA 4x7 (90mm)	SILICONE PIPE 4x7 (90mm)
I..444	CABLE RED USA	USA WIRING
I..482	TE PORTATUBOS	FITTING
I..675	BOMBA 110V 52W PLASTICO	110V 52W PLASTIC PUMP
I..68A	CUERPO GRIFO	TAP BODY
I..68L	PROLONGADOR GRIFO LARGO	LONG TAP EXTENSION
I..693	VALVULA S-2 REFORZADA	S-2 REINFORCED VALVE
I..703	PORTA MOLIDO+ FILTRO Y SALIDA	1 COFFEE GROUND FILTERHOLDER
I..723	TORNILLO DIN 7985 M3x5 ZN	SCREW DIN 7985 M3x5 ZN
I..816	PIÑA VAPOR CON ROSCA	THREADED STEAM STEP
I..820	TUBO CAPPUCCINO STEEL	CAPPUCCINO STEEL PIPE
I..869	RACORD BASIC 2070 1/8" 1/8" 22	BASIC FITTING 2070 1/8" 1/8" 2
I..891	BOQUILLA CAPPUCCINO ROSCADA	NUT CAPPUCCINO NOZZLE
I..892	TUBO VAPOR	PIPE STEAM
I..894	TUBO VAPOR STEEL	SCREW NOZZLE PIPE STEAM QUIMIC
I..952	TUBO TEFLON 2X4 (140mm)	TEFLON PIPE 2X4 (140mm)
I..966	TAPA CALDERA EV RES. 230V 900W	BOILER EV+RESISTANCE LID 220V/900W
I..967	TAPA CALDERA EV + RESIST. 120V	BOILER EV+RESISTANCE LID 120V
I.1057	ELECTROV.3 VIAS 230V 1/8 1/8 P	230V 1/8 1/8 PASS 1.5 SOLENOID
I.1114	BOQUILLA CAPPUCCINO 3 SALIDAS	CAPPUCCINO NOZZLE 3 WAYS
I.1149	CABLE FUSIBLE ARC BASIC PF	ARC/BASIC PF FUSE WIRING
I.1257	RACORD ELECTROVALVULA	SOLENOID FITTING
I.1263	TUERCA BICONO 4	BICONE NUT 4
I.1264	BICONO 4	BICONE 4
I.2116	TUBO SILICONA 4x7mm (35mm)	(35mm) 4x7mm SILICONE PIPE
I.2212	TUBO CHIMENEA	PIPE
KIT..1	KIT PASTILLA - MOLIDO	POD - GROUND KIT
MI..84	ARANDELA ELASTICA	WASHER
PM...3	CONJUNTO BOMBA ARC PM 220V	220V PM ARC PUMP WHOLE
PM..13	CONJUNTO BOMBA ARC PM 110V	110V PM ARC PUMP WHOLE
PM..25	GRIFO ARC/ELIPSE/UNO	ARC/ELIPSE/UNO TAP
PM..95	CONJUNTO POMO NEGRO	BLACK HANDLE WHOLE

ASCASO

389 Grupo Caldera Electroválvula Basic ■ Basic Solenoid Boiler Group

Ref.	Descripción	Description
C...32	DUCHA	SHOWER
ESC.14	GRUPO CALDERA EV BASIC 230V	BOILER GROUP EV BASIC 230V
ESC114	GRUPO CALDERA EV BASIC 120V	BOILER GROUP EV BASIC 120V
I...13	VALVULA SILICONA INTERC.	SILICONE VALVE
I...15	MUELLE VALVULA RETENCION	RETENTION VALVE SPRING
I...17	TORICA UNION INTERCAMB. SILICONA	SILICONE RING
I...18	JUNTA TORICA CIALDA	RING
I...21	TORNILLO INOX APRIETE P.F	INOX SCREW
I...43	TERMOSTATO 140º	140º THERMOSTAT
I...45	RACOR RECTO	STRAIGHT FITTING
I...46	REFUERZO TUBO	PIPE REINFORCEMET
I...48	CAMPANA GRUPO LATON	BRASS GROUP BELL
I...50	TORICA CALDERA SILICONA	SILICONE BOILER GASKET
I...53	PORTADUCHA	BRASS SHOWERHOLDER
I...54	JUNTA PORTADUCHA SILICONA	SILICONE GASKET
I...55	DUCHA	SHOWER
I...57	JUNTA PORTA	HOLDERGASKET
I...58	TORNILLO BRIDA FUSIBLE	SCREW
I...66	CHAPA SOPORTE CALDERA	BOILER PLATE
I...71	PIPETA ASPIRACION	SUCTION FITTING
I...76	EJE GRIFO	TAP ROD
I...77	FIJACION TUBO VAPOR	PIPE STEAM FIXATION
I...80	PROTECTOR TUBO VAPOR	STEAM PIPE PROTECTOR
I...84	SOPORTE BOMBA 90º	90º PUMP SUPPORT
I...85	POMO GRIFO	TAP HANDLE
I...86	EMBELLECEDOR POMO INOX	INOX HANLE LID
I...89	MUELLE POMO	HANDLE SPRING
I...91	JUNTA TORICA EJE	SILICONE RING
I...92	MACHON	FITTING MALE
I...94	TUERCA APRIETE GRIFO	TAP NUT
I..129	RETENEDOR CABLE	WIRING TERMINAL
I..130	REGLETA 3 VIAS	3 WAYS CONNECTOR
I..135	RACOR CODO	ELBOW FITTING
I..138	TUERCA BICONO	BICONE NUT
I..139	BICONO 6 mm	BICONE
I..140	CABLE RED	ELECTRIC WIRING
I..141	CABLE RED UK	UK WIRING
I..142	CABLE RED SUIZA	SWITZERLAND WIRING
I..143	CABLE RED ISRAEL	ISRAEL WIRING
I..145	CABLE RED AUSTRALIA	AUSTRALIAN WIRING
I..147	CONDENSADOR	CONDENSER
I..277	SUPLEMENTO CAFE MOLIDO	GROUND COFFEE SUPLEMENT
I..292	BOMBA ULKA EP-5 230V PLASTICO	ULKA EP-5 230V PUMP
I..304	TORNILLO DUCHA	SHOWER SCREW
I..358	TORNILLO PORTADUCHA INOX	INOX SCREW
I..374	TERMOSTATO 100º	100º THERMOSTAT
I..413	TUBO SILICONA 5x8 (205MM)	SILICONE PIPE 5x8 (205MM)
I..430	TORNILLO M5x6	M5x6 SCREW
I..439	TUBO SILICONA 4x7 (100mm)	SILICONE PIPE 4x7 (100mm)
I..442	TUBO TEFLON 4x6 (105mm)	TEFLON PIPE 4x6 (105mm)
I..443	TUBO SILICONA 4x7 (90mm)	SILICONE PIPE 4x7 (90mm)
I..444	CABLE RED USA	USA WIRING
I..449	CABLEADO ARC COLOR CALDER	ARC COLOUR BOILER WIRING
I..482	TE PORTATUBOS	FITTING
I..675	BOMBA 110V 52W PLASTICO	110V 52W PLASTIC PUMP
I..68A	CUERPO GRIFO	TAP BODY
I..68L	PROLONGADOR GRIFO LARGO	LONG TAP EXTENSION
I..693	VALVULA S-2 REFORZADA	S-2 REINFORCED VALVE
I..706	ELECTROVALVULA PASO 1.5 110V	120V 3 WAYS SOLENOID
I..723	TORNILLO DIN 7985 M3x5 ZN	SCREW DIN 7985 M3x5 ZN
I..816	PIÑA VAPOR CON ROSCA	THREADED STEAM STEP
I..820	TUBO CAPPUCCINO STEEL	CAPPUCCINO STEEL PIPE
I..825	CHAPA MECANISMO BASIC	BASIC MECHANISME PLATE
I..857	POMO GRIFO BLANCO	WHITE HANDLE TAP
I..859	PROTECTOR TUBO VAPOR BLANCO	STEAM PIPE WHITE PROTECTOR
I..869	RACORD BASIC 2070 1/8" 1/8" 22	BASIC FITTING 2070 1/8" 1/8" 22
I..891	BOQUILLA CAPPUCCINO ROSCADA	NUT CAPPUCCINO NOZZLE
I..892	TUBO VAPOR	PIPE STEAM
I..894	TUBO VAPOR STEEL	SCREW NOZZLE PIPE STEAM QUIMIC
I..952	TUBO TEFLON 2X4 (140mm)	TEFLON PIPE 2X4 (140mm)
I..966	TAPA CALDERA EV RESIST. 230V 900W	BOILER EV+RESISTANCE LID 220V/900W
I..967	TAPA CALDERA EV + RESIST. 120V	BOILER EV+RESISTANCE LID 120V
I.1057	ELECTROV. 3 VIAS 230V 1/8 1/8 P	230V 1/8 1/8 PASS 1.5 SOLENOID
I.1114	BOQUILLA CAPPUCCINO 3 SALIDAS	CAPPUCCINO NOZZLE 3 WAYS
I.1149	CABLE FUSIBLE ARC BASIC PF	ARC/BASIC PF FUSE WIRING
I.1257	RACORD ELECTROVALVULA	SOLENOID FITTING
I.1263	TUERCA BICONO 4	BICONE NUT 4
I.1264	BICONO 4	BICONE 4
I.2116	TUBO SILICONA 4x7MM (35MM)	4x7MM (35MM) SILICONE PIPE
I.2212	TUBO CHIMENEA UP	PIPE
KIT..1	KIT PASTILLA - MOLIDO	POD - GROUND KIT
MI..84	ARANDELA ELASTICA	WASHER
PM...7	CONJUNTO BOMBA BASIC PM 220V	220V PM BASIC PUMP WHOLE
PM..17	CONJUNTO BOMBA BASIC PM 110V	110V PM BASIC PUMP WHOLE
PM..23	GRIFO BASIC	BASIC TAP
PM..95	CONJUNTO POMO NEGRO	BLACK HANDLE WHOLE
PM..96	CONJUNTO POMO BLANCO	WHITE HANDLE WHOLE

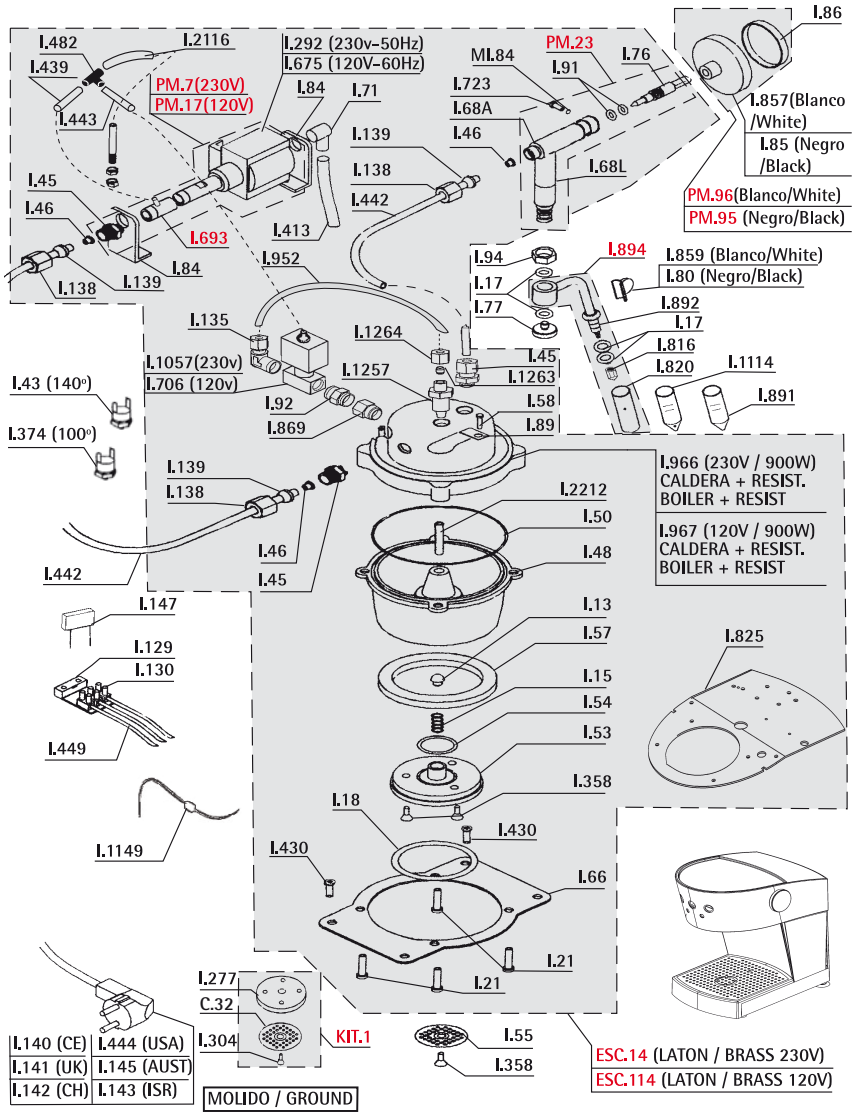

390 Grupo Caldera Basic One Cápsula ■ Basic One Capsule Boiler Group

Ref.	Descripción	Description
ESC.88	GRUPO CAPSULA BASIC ONE 230V	230V ONE BASIC CAPSULE GROUP
ESC202	GRUPO CALDERA BASIC ONE CAPS. 120V	120V CAPS. BASIC ONE BOILER GROUP
I...21	TORNILLO INOX APRIETE P.F	INOX SCREW
I...44	RACOR CODO	ELBOW FITTING
I...45	RACOR RECTO	STRAIGHT FITTING
I...46	REFUERZO TUBO	PIPE REINFORCEMET
I...48	CAMPANA GRUPO LATON	BRASS GROUP BELL
I...49	TUBO CHIMENEA	PIPE
I...50	TORICA CALDERA SILICONA	SILICONE BOILER GASKET
I...54	JUNTA PORTADUCHA SILICONA	SILICONE GASKET
I...66	CHAPA SOPORTE CALDERA	BOILER PLATE
I...71	PIPETA ASPIRACION	SUCTION FITTING
I...90	RACOR CODO	ELBOW FITTING
I..129	RETENEDOR CABLE	WIRING TERMINAL
I..130	REGLETA 3 VIAS	3 WAYS CONNECTOR
I..135	RACOR CODO	ELBOW FITTING
I..138	TUERCA BICONO	BICONE NUT
I..139	BICONO 6 mm	BICONE
I..140	CABLE RED	ELECTRIC WIRING
I..141	CABLE RED UK	UK WIRING
I..142	CABLE RED SUIZA	SWITZERLAND WIRING
I..143	CABLE RED ISRAEL	ISRAEL WIRING
I..145	CABLE RED AUSTRALIA	AUSTRALIAN WIRING
I..147	CONDENSADOR	CONDENSER
I..192	TUERCA LATON	BRASS NUT
I..358	TORNILLO PORTADUCHA INOX	INOX SCREW
I..374	TERMOSTATO 100º	100º THERMOSTAT
I..413	TUBO SILICONA 5x8 (205MM)	SILICONE PIPE 5x8 (205MM)
I..430	TORNILLO M5x6	M5x6 SCREW
I..439	TUBO SILICONA 4x7 (100mm)	SILICONE PIPE 4x7 (100mm)
I..442	TUBO TEFLON 4x6 (105mm)	TEFLON PIPE 4x6 (105mm)
I..443	TUBO SILICONA 4x7 (90mm)	SILICONE PIPE 4x7 (90mm)
I..444	CABLE RED USA	USA WIRING
I..482	TE PORTATUBOS	FITTING
I..693	VALVULA S-2 REFORZADA	S-2 REINFORCED VALVE
I..706	ELECTROVALVULA PASO 1.5 110V	120V 3 WAYS SOLENOID
I..825	CHAPA MECANISMO BASIC	BASIC MECHANISME PLATE
I..829	PORTA DUCHA CAPSULA	SHOWER CAPSULE FILTERHOLDER
I.1057	ELECTROV.3 VIAS 230V 1/8 1/8 P	230V 1/8 1/8 PASS 1.5 SOLENOID
I.1081	ARANDELA SILICONA	SILICONE 28x24x3
I.1082	DUCHA CAPSULA	CAPSULE SHOWER
I.1083	TORICA 48x2.5 EPDM	RING 48x2.5 EPDM
I.1160	TUBO TEFLON 2x4 (120mm)	TEFLON PIPE 2x4 (120mm)
I.1165	TAPA CALDERA OPV RES. 230V 900W	BOILER OPV+RESIST. LID 230V
I.1166	TAPA CALDERA OPV RES. 120V 900W	BOILER OPV+RESIST. LID 120V
I.1257	RACORD ELECTROVALVULA	SOLENOID FITTING
I.1263	TUERCA BICONO 4	BICONE NUT 4
I.1264	BICONO 4	BICONE 4
I.2116	TUBO SILICONA 4X7MM (35MM)	4X7MM (35MM) SILICONE PIPE
I.2201	BOMBA ULKA EP5FM 230V 50HZ	EP5FM 230V 50HZ INNOVA 40W ULKA
I.2212	TUBO CHIMENEA UP	UP OUTLET PIPE
PM.105	CJTO PATA MOLINO INOX	INOX GROUND FOOT WHOLE

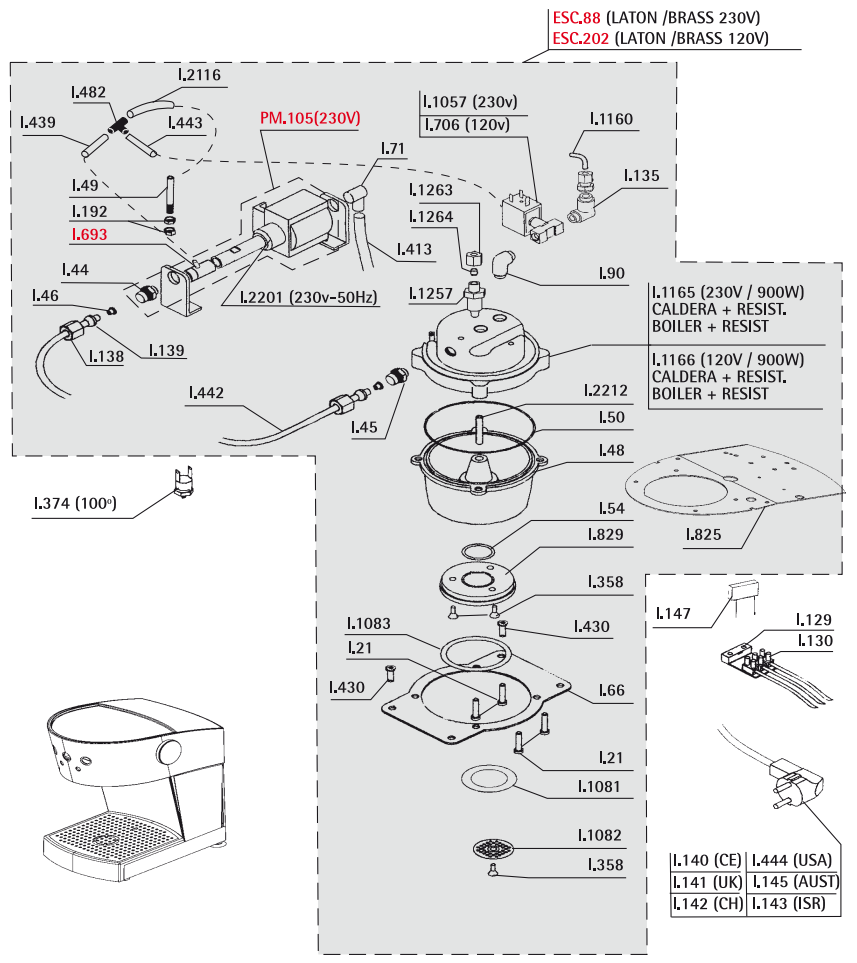

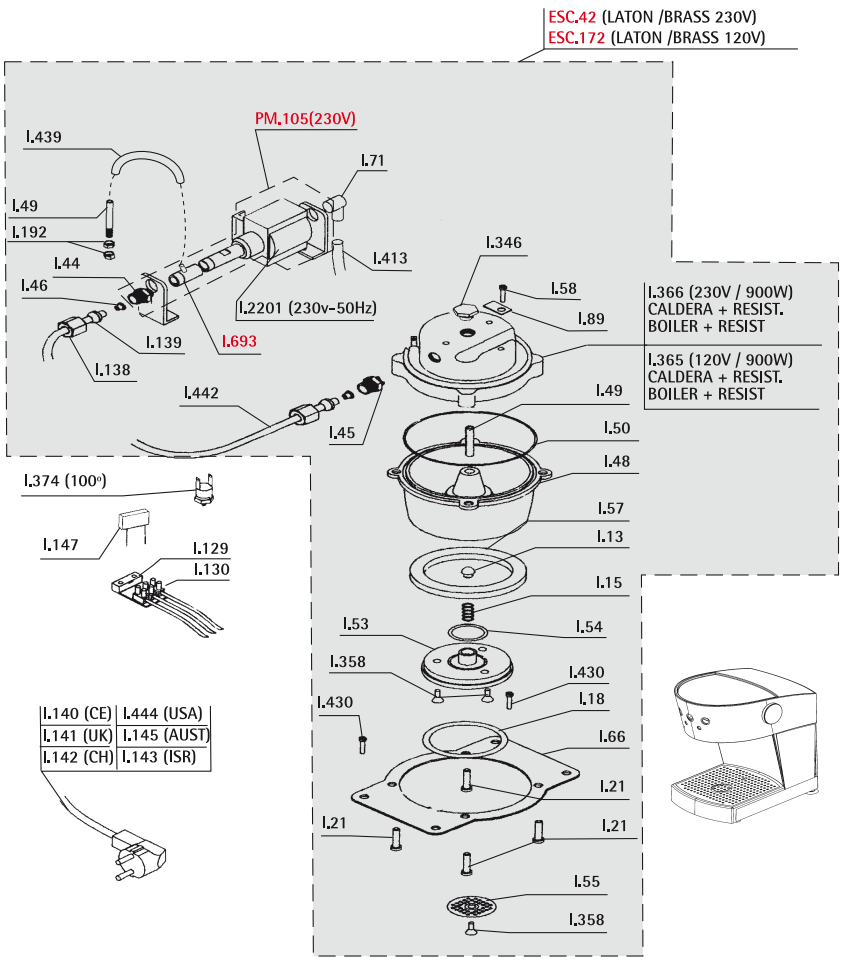

Ref.	Descripción	Description
ESC.42	GRUPO CALDERA BASIC ONE 230V	*230V ONE BASIC BOILER GROUP*
ESC172	GRUPO CALDERA BASIC ONE 120V	*120V ONE BASIC BOILER GROUP*
I...13	VALVULA SILICONA INTERC.	*SILICONE VALVE*
I...15	MUELLE VALVULA RETENCION	*RETENTION VALVE SPRING*
I...18	JUNTA TORICA CIALDA	*RING*
I...21	TORNILLO INOX APRIETE P.F	*INOX SCREW*
I...44	RACOR CODO	*ELBOW FITTING*
I...45	RACOR RECTO	*STRAIGHT FITTING*
I...46	REFUERZO TUBO	*PIPE REINFORCEMET*
I...48	CAMPANA GRUPO LATON	*BRASS GROUP BELL*
I...49	TUBO CHIMENEA	*PIPE*
I...50	TORICA CALDERA SILICONA	*SILICONE BOILER GASKET*
I...53	PORTADUCHA	*BRASS SHOWERHOLDER*
I...54	JUNTA PORTADUCHA SILICONA	*SILICONE GASKET*
I...55	DUCHA	*SHOWER*
I...57	JUNTA PORTA	*HOLDERGASKET*
I...58	TORNILLO BRIDA FUSIBLE	*SCREW*
I...66	CHAPA SOPORTE CALDERA	*BOILER PLATE*
I...71	PIPETA ASPIRACION	*SUCTION FITTING*
I...89	MUELLE POMO	*HANDLE SPRING*
I..129	RETENEDOR CABLE	*WIRING TERMINAL*
I..130	REGLETA 3 VIAS	*3 WAYS CONNECTOR*
I..138	TUERCA BICONO	*BICONE NUT*
I..139	BICONO 6 mm	*BICONE*
I..140	CABLE RED	*ELECTRIC WIRING*
I..141	CABLE RED UK	*UK WIRING*
I..142	CABLE RED SUIZA	*SWITZERLAND WIRING*
I..143	CABLE RED ISRAEL	*ISRAEL WIRING*
I..145	CABLE RED AUSTRALIA	*AUSTRALIAN WIRING*
I..147	CONDENSADOR	*CONDENSER*
I..192	TUERCA LATON	*BRASS NUT*
I..346	TAPON 1/8	*1/8 CAP*
I..358	TORNILLO PORTADUCHA INOX	*INOX SCREW*
I..365	TAPA CALDERA + RESIST. 110V	*110V RESIST.+ BOILER LID*
I..366	TAPA CALDERA + RESIST. 220V	*220V RESIST.+BOILER LID*
I..374	TERMOSTATO 100º	*100º THERMOSTAT*
I..413	TUBO SILICONA 5x8 (205MM)	*SILICONE PIPE 5x8 (205MM)*
I..430	TORNILLO M5x6	*M5x6 SCREW*
I..439	TUBO SILICONA 4x7 (100mm)	*SILICONE PIPE 4x7 (100mm)*
I..442	TUBO TEFLON 4x6 (105mm)	*TEFLON PIPE 4x6 (105mm)*
I..444	CABLE RED USA	*USA WIRING*
I..693	VALVULA S-2 REFORZADA	*S-2 REINFORCED VALVE*
I.2201	BOMBA ULKA EP5FM 230V 50HZ	*EP5FM 230V 50HZ INNOVA 40W ULKA*
PM.105	CONJUNTO PATA MOLINO INOX	*INOX GROUND FOOT WHOLE*

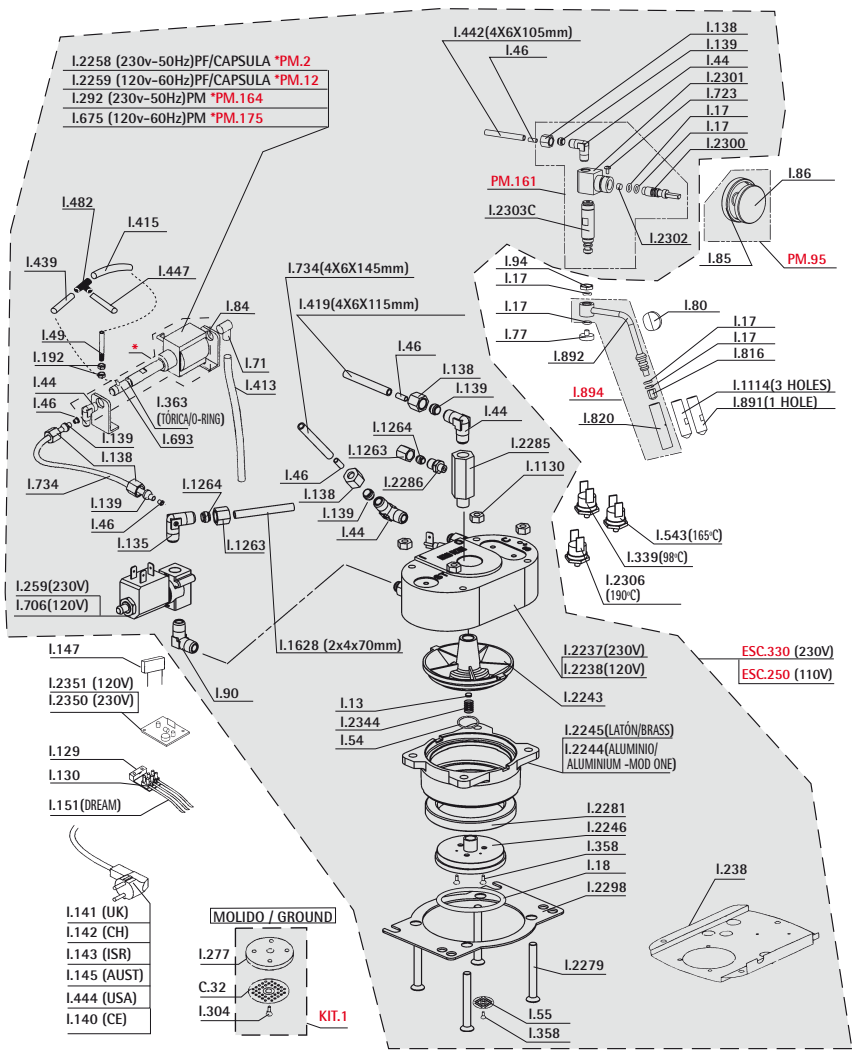

Ref.	Descripción	Description
C.32	DUCHA	*SHOWER*
I.13	VALVULA SILICONA	*SILICONE VALVE*
I.17	JUNTA TORICA	*SILICONE RING*
I.18	JUNTA CIALDA GRUPO	*SILICONE RING*
I.44	RACORD CODO	*RL BOIX FITTING*
I.46	REFUERZO TUBO	*PIPE REINFORCEMET*
I.49	TUBO CHIMENEA	*CHIMNEY PIPE*
I.54	JUNTA PORTADUCHA SILICONA	*SILICONE GASKET*
I.55	DUCHA	*SHOWER*
I.71	PIPETA ASPIRACION	*90º FITTING*
I.77	FIJACION TUBO VAPOR CROMADO	*PIPE STEAM SCREW*
I.80	PROTECTOR TUBO VAPOR NEGRO	*PROTECTOR STEAM PIPE*
I.84	SOPORTE BOMBA 90º	*PUMP SUPPORT*
I.85	POMO GRIFO NEGRO	*HANDLE*
I.86	EMBELLECEDOR POMO INOX	*INOX HANLE LID*
I.90	RACOR CODO MACHO 1/8 LATON	*FITTING*
I.94	TUERCA APRIETE GRIFO	*TAP NUT*
I.129	RETENEDOR CABLE	*TERMINAL WIRING*
I.130	REGLETA 3 VIAS	*TERMINAL BLOCK*
I.135	RACOR CODO 13280 4 1/8	*FITTING*
I.138	TUERCA BICONO	*NUT*
I.139	BICONO DE 6	*BICONE*
I.140	CABLE RED EUROPEO	*WIRING 230v*
I.141	CABLE RED UK	*WIRING UK*
I.142	CABLE RED SUIZA	*SWITZERLAND WIRING*
I.143	CABLE RED ISRAEL	*ISRAEL WIRING*
I.145	CABLE RED AUSTRALIA	*AUSTRALIAN WIRING*
I.147	CONDENSADOR UL	*CONDENSER*
I.151	CABLEADO DREAM PF	*DREAM WIRING*
I.192	TUERCA LATON	*NUT*
I.238	CHAPA GRUPO DREAM	*DREAM GROUP SHEET*
I.259	ELECTROV. 3 VIAS PASO 1.2 230V 1/8-1/8 0-15BAR	*3 WAY SOLENOID*
I.277	SUPLEMENTO CAFE MOLIDO	*COFFEE SUPLEMENT*
I.292	BOMBA ULKA 230V PLASTICO EP5	*PLASTIC ULKA 230V PUMP*
I.304	TORNILLO DUCHA	*SHOWER SCREW*
I.339	TERMOSTATO 98º	*98ºC THERMOSTAT*
I.358	TORNILLO PORTADUCHA M4	*M4 SCREW*
I.363	C.INTERC.LATON+RESIST.110V	*110VRESIST+BRASS THERM BODY*
I.413	TUBO SILICONA 5x8 (205mm)	*SILICONE PIPE 5x8 (205mm)*
I.415	TUBO SILICONA 4x7 (65mm)	*SILICONE PIPE 4x7 (65mm)*
I.419	TUBO TEFLON 4x6 (115mm)	*TEFLON PIPE 4x6 (115mm)*
I.439	TUBO SILICONA 4x7 (100mm)	*SILICONE PIPE 4x7 (100mm)*
I.442	TUBO TEFLON 4x6 (105mm)	*TEFLON PIPE 4x6 (105mm)*
I.444	CABLE RED USA SJTO	*USA WIRING (SJTO)*
I.447	TUBO SILICONA 4x7 (25mm)	*SILICONE PIPE 4x7 (25mm)*
I.482	TE PORTATUBOS	*FITTING*
I.543	TERMOSTATO 165º CERAMICO	*165º CERAMIC THERMOSTAT*
I.675	BOMBA 110V 52W PLASTICO	*120V 52W PLASTIC PUMP*
I.693	VALVULA S2 MONTADA	*ASSEMBLED S2 VALVE*
I.706	ELECTROV. 3 VIAS PASO 1.5 120V 1/8-1/8 0-15BAR	*120V 3 WAYS SOLENOID*
I.723	TORNILLO DIN 7985 M3 X 5 ZN	*DIN 7985 M3 X 5 ZN SCREW*
I.734	TUBO TEFLON 4x6 (145mm)	*4x6 (145mm) TEFLON PIPE*
I.816	PIÑA VAPOR CON ROSCA	*THREADED STEAM STEP*
I.820	TUBO CAPPUCCINO	*CAPPUCCINO STEEL PIPE*
I.891	BOQUILLA CAPUCCINO ROSCADA 1 AGUJERO	*NUT CAPPUCCINO NOZZLE*
I.892	TUBO VAPOR	*PIPE STEAM*
I.894	TUBO VAPOR BOQUILLA ROSCADA	*SCREW NOZZLE PIPE STEAM QUIMIC NICKEL*
I.1114	BOQUILLA CAPUCCINO 3 AGUJEROS	*CAPPUCCINO NOZZLE 3 WAYS*
I.1130	TUERCA CON ARANDELA M5	*NUT M5*
I.1263	TUERCA BICONO 4	*BICONE NUT 4*
I.1264	BICONO 4	*BICONE 4*
I.1628	TUBO TEFLON 2x4 (70mm)	*TEFLON PIPE 2x4x70 LARGE*
I.2237	CJTO INTERCAMBIADOR INOX. 230V	*THERMOBLOCK INOX. 230V*
I.2238	CJTO. INTERCAMBIADOR INOX. 1000W 120V	*WHOLE. THERMOBLOCK INOX. 1000W 120V*
I.2243	POSTIZO - GRUPO INTERCAMBIADOR	*SUPPLEMENT - GROUP THERMOBLOCK*
I.2244	CAMPANA ALUMINIO INTERCAMBIADOR	*ALUMINIUM GROUP HEAD FOR HEAT EXCHANGER*
I.2245	CAMPANA LATON INTERCAMBIADOR	*BRASS GROUP HEAD FOR HEAT EXCHANGER*
I.2246	PORTADUCHAS - GRUPO INTERCAMBIADOR	*HOLDERSHOWER - GROUP THERMOBLOCK*
I.2258	BOMBA ULKA EP4 20 BAR 48W 230V	*ULKA EP4 20 BAR 48W 230V PUMP*
I.2259	BOMBA ULKA EP4 20 BAR 48W 120V	*ULKA EP4 20 BAR 48W 120V PUMP*
I.2279	TORNILLO M5X50 DIN7991 A-2 INOX	*SCREW M5X50 DIN7991 A-2 SS*
I.2281	JUNTA PORTA 73,5x54x8,5	*GASKET 73,5x54x8,5*
I.2285	RACORD CONEXION GRIFO	*FITTING*
I.2286	RACORD CONEXION INTERCAMBIADOR	*FITTING*
I.2298	CHAPA SOPORTE GRUPO NUEVO	*NEW GROUP SUPPORT METAL PLATE*
I.2300	EJE GRIFO VAPOR/AGUA NIQ. QUIMICO	*EJE TAP STEAM/WATER*
I.2301	CUERPO GRIFO VAPOR/AGUA NIQ. QUIMICO	*BODY TAP STEAM/WATER*
I.2302	TACO CIERRE GRIFO VITON 6.5X4mm	*GASKET TAP VITON 6.5X4mm*
I.2306	TERMOSTATO SEGURIDAD 190ºC	*SAFETY THERMAL SWITCH 190ºC*
I.2344	MUELLE VALVULA GRUPO INOX	*THERMOBLOCK INOX SPRING*
I.2350	PLACA IMPULSO INTERCAMBIADOR INOX 230V	*PULSE CIRCUIT THERMOBLOCK INOX 230V*
I.2351	PLACA IMPULSO INTERCAMBIADOR INOX 120V	*PULSE CIRCUIT THERMOBLOCK INOX 120V*
I.2303C	PROLONGACION CORTA GRIFO VAPOR/AGUA NIQ. QUIMICO	*SUPPLEMENT CORTA TAP STEAM/WATER*
PM.95	CJTO POMO NEGRO	*BLACK HANDLE*
PM.161	CJTO GRIFO DREAM 2012	*WHOLE TAP DREAM 2012*

ascaso

393 Grupo Thermoblock Alu+Inox BASIC PM +09/2012 ■ BASIC PM Alu+SS Thermoblock Group +09/2012

Ref.	Descripción	Description
C.32	DUCHA	SHOWER
I.13	VALVULA SILICONA	SILICONE VALVE
I.17	JUNTA TORICA	SILICONE RING
I.18	JUNTA CIALDA GRUPO	SILICONE RING
I.44	RACORD CODO	RL BOIX FITTING
I.46	REFUERZO TUBO	PIPE REINFORCEMET
I.49	TUBO CHIMENEA	CHIMNEY PIPE
I.54	JUNTA PORTADUCHA SILICONA	SILICONE GASKET
I.55	DUCHA	SHOWER
I.68C	PROLONGACION GRIFO CORTA NIQ. QUIMICO	SHORT PROLONGATION
I.71	PIPETA ASPIRACION	90º FITTING
I.77	FIJACION TUBO VAPOR CROMADO	PIPE STEAM SCREW
I.80	PROTECTOR TUBO VAPOR NEGRO	PROTECTOR STEAM PIPE
I.84	SOPORTE BOMBA 90º	PUMP SUPPORT
I.85	POMO GRIFO NEGRO	HANDLE
I.86	EMBELLECEDOR POMO INOX	INOX HANLE LID
I.90	RACOR CODO MACHO 1/8 LATON	FITTING
I.94	TUERCA APRIETE GRIFO	TAP NUT
I.99	TORNILLO M3x8 INOX	SCREW
I.129	RETENEDOR CABLE	TERMINAL WIRING
I.130	REGLETA 3 VIAS	TERMINAL BLOCK
I.135	RACOR CODO 13280 4 1/8	FITTING
I.138	TUERCA BICONO	NUT
I.139	BICONO DE 6	BICONE
I.141	CABLE RED UK	WIRING UK
I.142	CABLE RED SUIZA	SWITZERLAND WIRING
I.143	CABLE RED ISRAEL	ISRAEL WIRING
I.145	CABLE RED AUSTRALIA	AUSTRALIAN WIRING
I.147	CONDENSADOR UL	CONDENSER
I.192	TUERCA LATON	NUT
I.259	ELECTROV. 3 VIAS PASO 1.2 230V 1/8-1/8 0-15BAR	3 WAY SOLENOID
I.277	SUPLEMENTO CAFE MOLIDO	COFFEE SUPLEMENT
I.292	BOMBA ULKA 230V PLASTICO EP5	PLASTIC ULKA 230V PUMP
I.304	TORNILLO DUCHA	SHOWER SCREW
I.339	TERMOSTATO 98º	98ºC THERMOSTAT
I.358	TORNILLO PORTADUCHA M4	M4 SCREW
I.363	C.INTERC.LATON+RESIST.110V	110VRESIST+BRASS THERM BODY
I.398	TUERCA AUTOBLOCANTE M3	NUT
I.410	TUBO TEFLON 4x6 (85mm)	TEFLON PIPE 4x6 (85mm)
I.413	TUBO SILICONA 5x8 (205mm)	SILICONE PIPE 5x8 (205mm)
I.444	CABLE RED USA SJTO	USA WIRING (SJTO)
I.447	TUBO SILICONA 4x7 (25mm)	SILICONE PIPE 4x7 (25mm)
I.448	CABLEADO BASIC PF / ARC FUN PF	ARC FUN FF/BASIC FF WIRING
I.482	TE PORTATUBOS	FITTING
I.543	TERMOSTATO 165º CERAMICO	165º CERAMIC THERMOSTAT
I.675	BOMBA 110V 52W PLASTICO	120V 52W PLASTIC PUMP
I.693	VALVULA S2 MONTADA	ASSEMBLED S2 VALVE
I.706	ELECTROV. 3 VIAS PASO 1.5 120V 1/8-1/8 0-15BAR	120V 3 WAYS SOLENOID
I.723	TORNILLO DIN 7985 M3 X 5 ZN	DIN 7985 M3 X 5 ZN SCREW
I.734	TUBO TEFLON 4x6 (145mm)	4x6 (145mm) TEFLON PIPE
I.740	TUBO TEFLON 4x6 (80mm)	4x6 (80mm) TEFLON PIPE
I.816	PIÑA VAPOR CON ROSCA	THREADED STEAM STEP
I.820	TUBO CAPPUCCINO	CAPPUCCINO STEEL PIPE
I.892	TUBO VAPOR	PIPE STEAM
I.894	TUBO VAPOR BOQUILLA ROSCADA	SCREW NOZZLE PIPE STEAM QUIMIC NICKEL
I.1130	TUERCA CON ARANDELA M5	NUT M5
I.1263	TUERCA BICONO 4	BICONE NUT 4
I.1264	BICONO 4	BICONE 4
I.1628	TUBO TEFLON 2x4 (70mm)	TEFLON PIPE 2x4x70 LARGE
I.2222	CABLE FUSIBLE 216ºC	STEAM WIRE - 216ºC
I.2237	CJTO INTERCAMBIADOR INOX. 230V	THERMOBLOCK INOX. 230V
I.2238	CJTO. INTERCAMBIADOR INOX. 1000W 120V	WHOLE. THERMOBLOCK INOX. 1000W 120V
I.2243	POSTIZO - GRUPO INTERCAMBIADOR	SUPPLEMENT - GROUP THERMOBLOCK
I.2244	CAMPANA ALUMINIO INTERCAMBIADOR	ALUMINIUM GROUP HEAD FOR HEAT EXCHANGER
I.2245	CAMPANA LATON INTERCAMBIADOR	BRASS GROUP HEAD FOR HEAT EXCHANGER
I.2246	PORTADUCHAS - GRUPO INTERCAMBIADOR	HOLDERSHOWER - GROUP THERMOBLOCK
I.2258	BOMBA ULKA EP4 20 BAR 48W 230V	ULKA EP4 20 BAR 48W 230V PUMP
I.2259	BOMBA ULKA EP4 20 BAR 48W 120V	ULKA EP4 20 BAR 48W 120V PUMP
I.2279	TORNILLO M5X50 DIN7991 A-2 INOX	SCREW M5X50 DIN7991 A-2 SS
I.2281	JUNTA PORTA 73,5x54x8,5	GASKET 73,5x54x8,5
I.2285	RACORD CONEXION GRIFO	FITTING
I.2286	RACORD CONEXION INTERCAMBIADOR	FITTING
I.2298	CHAPA SOPORTE GRUPO NUEVO	NEW GROUP SUPPORT METAL PLATE
I.2300	EJE GRIFO VAPOR/AGUA NIQ. QUIMICO	EJE TAP STEAM/WATER
I.2301	CUERPO GRIFO VAPOR/AGUA NIQ. QUIMICO	BODY TAP STEAM/WATER
I.2302	TACO CIERRE GRIFO VITON 6.5X4mm	GASKET TAP VITON 6.5X4mm
I.2304	SOPORTE GRIFO ARC/UNO	SUPPORT TAP ARC/UNO
I.2344	MUELLE VALVULA GRUPO INOX	THERMOBLOCK INOX SPRING
I.2350	PLACA IMPULSO INTERCAMBIADOR INOX 230V	PULSE CIRCUIT THERMOBLOCK INOX 230V
I.2351	PLACA IMPULSO INTERCAMBIADOR INOX 120V	PULSE CIRCUIT THERMOBLOCK INOX 120V
PM.95	CJTO POMO NEGRO	BLACK HANDLE
PM.162	CJTO GRIFO ARC/UNO 2012	WHOLE TAP ARC/UNO 2012

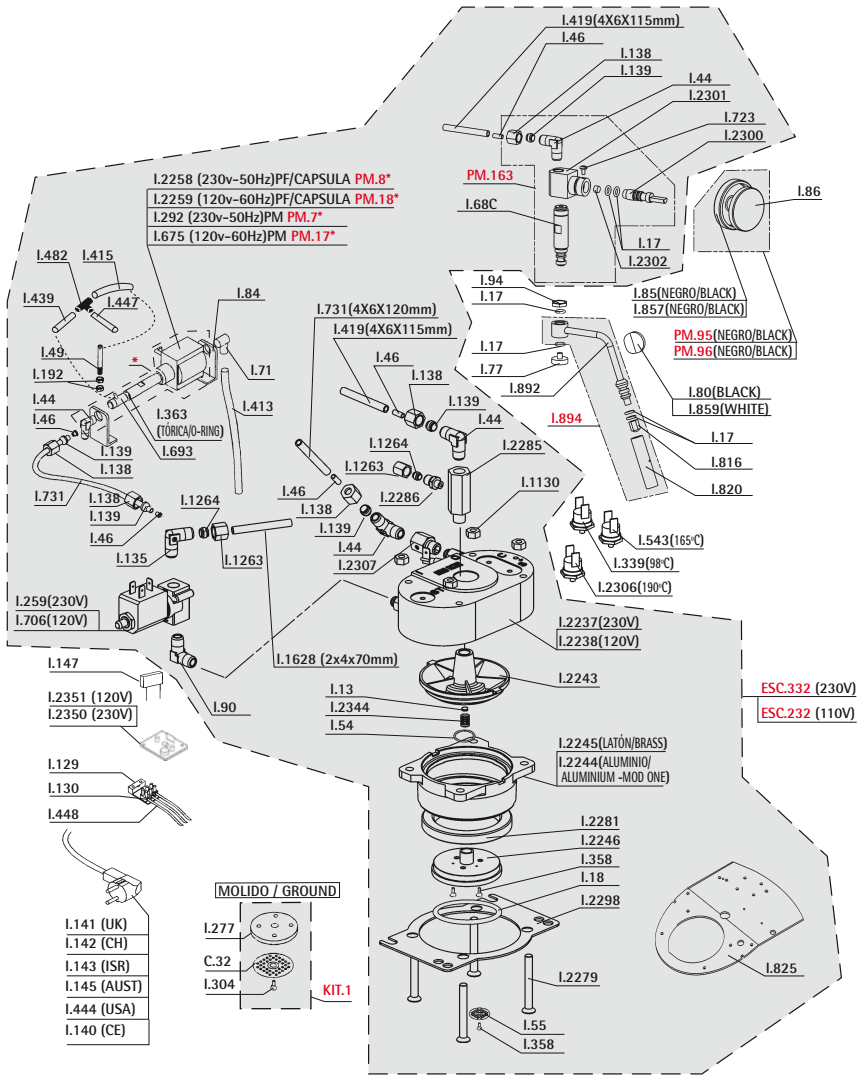

394 Grupo thermoblock Alu+Inox ARC PM +09/2012 ■ ARC PM Alu+ss Thermoblock Group +09/2012

Ref.	Descripción	Description
C.32	DUCHA	SHOWER
I.13	VALVULA SILICONA	SILICONE VALVE
I.17	JUNTA TORICA	SILICONE RING
I.18	JUNTA CIALDA GRUPO	SILICONE RING
I.44	RACORD CODO	RL BOIX FITTING
I.46	REFUERZO TUBO	PIPE REINFORCEMET
I.49	TUBO CHIMENEA	CHIMNEY PIPE
I.54	JUNTA PORTADUCHA SILICONA	SILICONE GASKET
I.55	DUCHA	SHOWER
I.68C	PROLONGACION GRIFO CORTA NIQ. QUIMICO	SHORT PROLONGATION
I.71	PIPETA ASPIRACION	90º FITTING
I.77	FIJACION TUBO VAPOR CROMADO	PIPE STEAM SCREW
I.80	PROTECTOR TUBO VAPOR NEGRO	PROTECTOR STEAM PIPE
I.84	SOPORTE BOMBA 90º	PUMP SUPPORT
I.85	POMO GRIFO NEGRO	HANDLE
I.86	EMBELLECEDOR POMO INOX	INOX HANLE LID
I.90	RACOR CODO MACHO 1/8 LATON	FITTING
I.94	TUERCA APRIETE GRIFO	TAP NUT
I.129	RETENEDOR CABLE	TERMINAL WIRING
I.130	REGLETA 3 VIAS	TERMINAL BLOCK
I.135	RACOR CODO 13280 4 1/8	FITTING
I.138	TUERCA BICONO	NUT
I.139	BICONO DE 6	BICONE
I.140	CABLE RED EUROPEO	WIRING 230v
I.141	CABLE RED UK	WIRING UK
I.142	CABLE RED SUIZA	SWITZERLAND WIRING
I.143	CABLE RED ISRAEL	ISRAEL WIRING
I.145	CABLE RED AUSTRALIA	AUSTRALIAN WIRING
I.147	CONDENSADOR UL	CONDENSER
I.192	TUERCA LATON	NUT
I.259	ELECTROV. 3 VIAS PASO 1.2 230V 1/8-1/8 0-15BAR	3 WAY SOLENOID
I.277	SUPLEMENTO CAFE MOLIDO	COFFEE SUPLEMENT
I.292	BOMBA ULKA 230V PLASTICO EP5	PLASTIC ULKA 230V PUMP
I.304	TORNILLO DUCHA	SHOWER SCREW
I.339	TERMOSTATO 98º	98ºC THERMOSTAT
I.358	TORNILLO PORTADUCHA M4	M4 SCREW
I.363	C.INTERC.LATON+RESIST.110V	110VRESIST+BRASS THERM BODY
I.413	TUBO SILICONA 5x8 (205mm)	SILICONE PIPE 5x8 (205mm)
I.419	TUBO TEFLON 4x6 (115mm)	TEFLON PIPE 4x6 (115mm)
I.419	TUBO TEFLON 4x6 (115mm)	TEFLON PIPE 4x6 (115mm)
I.427	TUBO SILICONA 4x7 (145mm)	SILICONE PIPE 4x7 (145mm)
I.443	TUBO SILICONA 4x7 (90mm)	SILICONE PIPE 4x7 (90mm)
I.444	CABLE RED USA SJTO	USA WIRING (SJTO)
I.447	TUBO SILICONA 4x7 (25mm)	SILICONE PIPE 4x7 (25mm)
I.448	CABLEADO BASIC PF / ARC FUN PF	ARC FUN FF/BASIC FF WIRING
I.482	TE PORTATUBOS	FITTING
I.543	TERMOSTATO 165º CERAMICO	165º CERAMIC THERMOSTAT
I.675	BOMBA 110V 52W PLASTICO	120V 52W PLASTIC PUMP
I.693	VALVULA S2 MONTADA	ASSEMBLED S2 VALVE
I.706	ELECTROV. 3 VIAS PASO 1.5 120V 1/8-1/8 0-15BAR	120V 3 WAYS SOLENOID
I.723	TORNILLO DIN 7985 M3 X 5 ZN	DIN 7985 M3 X 5 ZN SCREW
I.731	TUBO TEFLON 4x6 (120mm)	4x6 (120mm) TEFLON PIPE
I.816	PIÑA VAPOR CON ROSCA	THREADED STEAM STEP
I.820	TUBO CAPPUCCINO	CAPPUCCINO STEEL PIPE
I.825	CHAPA MECANISMO BASIC	BASIC MECHANISME PLATE
I.857	POMO BLANCO	WHITE HANDLE TAP
I.859	PROTECTOR TUBO VAPOR BLANCO	STEAM PIPE WHITE PROTECTOR
I.892	TUBO VAPOR	PIPE STEAM
I.894	TUBO VAPOR BOQUILLA ROSCADA	SCREW NOZZLE PIPE STEAM QUIMIC NICKEL
I.1130	TUERCA CON ARANDELA M5	NUT M5
I.1263	TUERCA BICONO 4	BICONE NUT 4
I.1264	BICONO 4	BICONE 4
I.1628	TUBO TEFLON 2x4 (70mm)	TEFLON PIPE 2x4x70 LARGE
I.2237	CJTO INTERCAMBIADOR INOX. 230V	THERMOBLOCK INOX. 230V
I.2238	CJTO. INTERCAMBIADOR INOX. 1000W 120V	WHOLE. THERMOBLOCK INOX. 1000W 120V
I.2243	POSTIZO - GRUPO INTERCAMBIADOR	SUPPLEMENT - GROUP THERMOBLOCK
I.2244	CAMPANA ALUMINIO INTERCAMBIADOR	ALUMINIUM GROUP HEAD FOR HEAT EXCHANGER
I.2245	CAMPANA LATON INTERCAMBIADOR	BRASS GROUP HEAD FOR HEAT EXCHANGER
I.2246	PORTADUCHAS - GRUPO INTERCAMBIADOR	HOLDERSHOWER - GROUP THERMOBLOCK
I.2258	BOMBA ULKA EP4 20 BAR 48W 230V	ULKA EP4 20 BAR 48W 230V PUMP
I.2259	BOMBA ULKA EP4 20 BAR 48W 120V	ULKA EP4 20 BAR 48W 120V PUMP
I.2279	TORNILLO M5X50 DIN7991 A-2 INOX	SCREW M5X50 DIN7991 A-2 SS
I.2281	JUNTA PORTA 73,5x54x8,5	GASKET 73,5x54x8,5
I.2285	RACORD CONEXION GRIFO	FITTING
I.2286	RACORD CONEXION INTERCAMBIADOR	FITTING
I.2298	CHAPA SOPORTE GRUPO NUEVO	NEW GROUP SUPPORT METAL PLATE
I.2300	EJE GRIFO VAPOR/AGUA NIQ. QUIMICO	EJE TAP STEAM/WATER
I.2301	CUERPO GRIFO VAPOR/AGUA NIQ. QUIMICO	BODY TAP STEAM/WATER
I.2302	TACO CIERRE GRIFO VITON 6.5X4mm	GASKET TAP VITON 6.5X4mm
I.2306	TERMOSTATO SEGURIDAD 190ºC	SAFETY THERMAL SWITCH 190ºC
I.2307	PROLONGACION GRUPO BASIC	BASIC COFFEE GROUP EXTENSION
I.2344	MUELLE VALVULA GRUPO INOX	THERMOBLOCK INOX SPRING
I.2350	PLACA IMPULSO INTERCAMBIADOR INOX 230V	PULSE CIRCUIT THERMOBLOCK INOX 230V
I.2351	PLACA IMPULSO INTERCAMBIADOR INOX 120V	PULSE CIRCUIT THERMOBLOCK INOX 120V
PM.163	CJTO GRIFO BASIC 2012	WHOLE TAP BASIC 2012
PM.96	CJTO POMO BLANCO	WHITE HANDLE
PM.95	CJTO POMO NEGRO	BLACK HANDLE

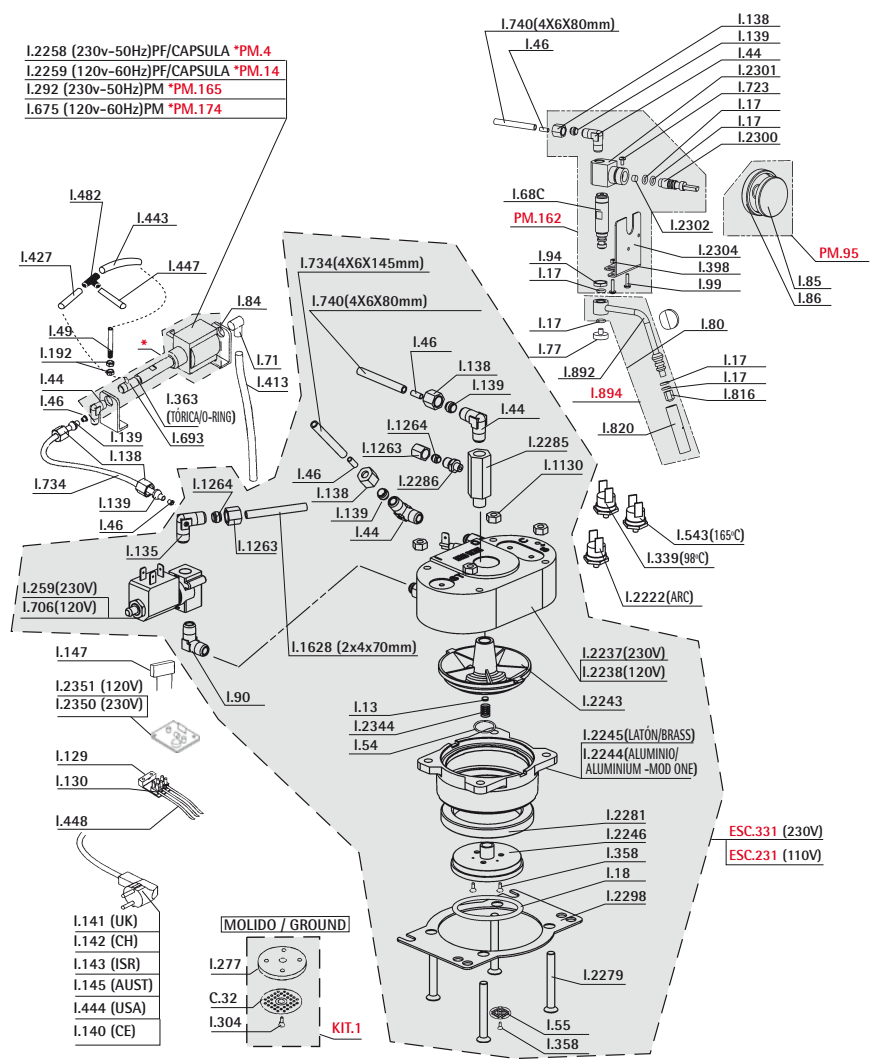

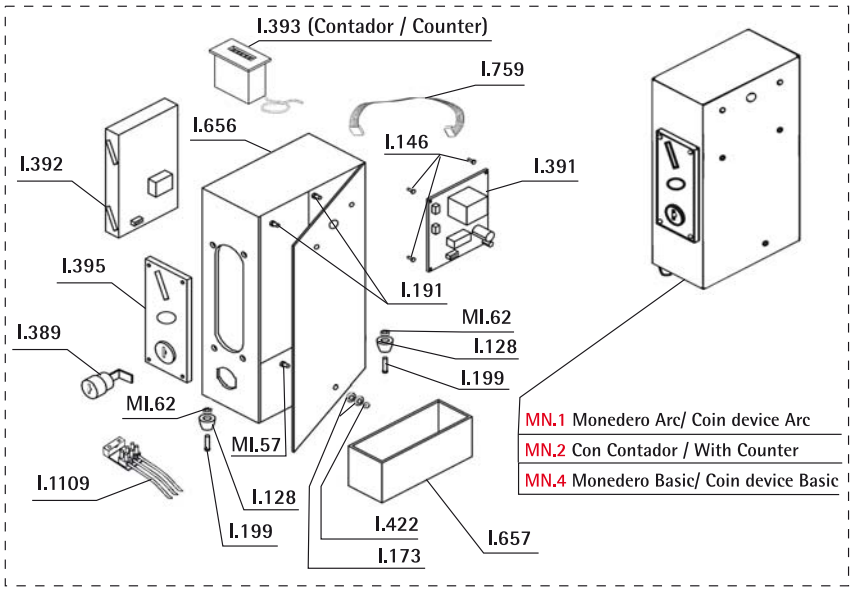

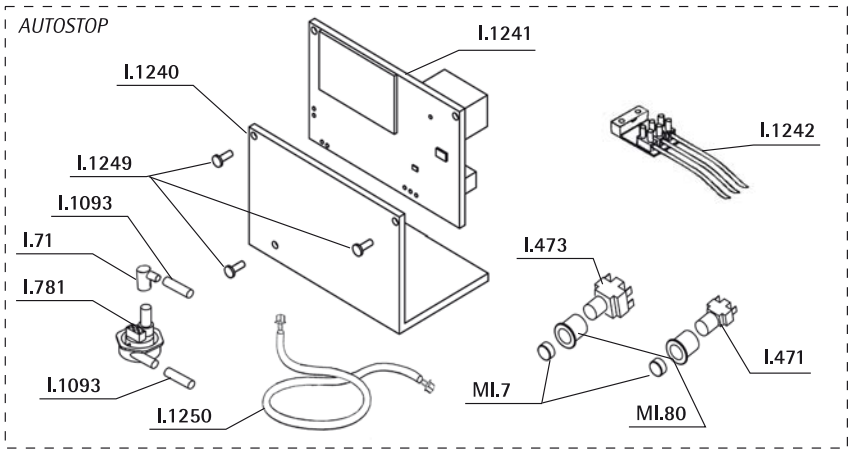

Ref.	Descripción	Description
I...71	PIPETA ASPIRACION	SUCTION FITTING
I..128	PIE GOMA	RUBBER FOOT
I..146	SOPORTE TERMOSTATO	THERMOSTAT SUPPORT
I..173	JUNTA GRUPO INT. TEFLON	TEFLON GASKET
I..191	TORNILLO TAPA ELIPSE	SCREW
I..199	REMACHE LARGO (3.2x12)	LONG REVET
I..389	CERRADURA CAJA MONEDERO	COIN BOX CLOSING KEY
I..391	CIRCUITO MONEDERO	COIN BOARD
I..392	VALIDADOR MONEDAS	COIN VALIDATOR
I..393	CONTADOR ELECTROMECANICO 12V	COUNTER 12V
I..395	FRONTAL VALIDADOR	FRONTAL CHECKER
I..422	TUERCA + ARANDELA	WASHER + NUT
I..471	INTERRUPTOR UNIPOLAR	ONE POLE SWICTH
I..473	INTERRUPTOR BIPOLAR	TWO POLES SWITCH
I..656	CAJA MONEDERO SUPER	BIG COIN BOX
I..657	CAJETIN MONEDAS SUPER	BIG COIN BOX
I..759	CABLE PLACA MONEDERO SUPER	CIRCUIT
I..781	CONTADOR VOLUMETRICO	FLOWMETER
I.1093	TUBO SILICONA 4x7 (300mm)	SILICONE PIPE 4x7 (300mm)
I.1109	CABLEADO BASIC MONEDERO	COIN BOX BASIC WIRING
I.1240	SOPORTE PLACA AUTOSTOP	AUTOSTOP PLATE SUPPORT
I.1241	PLACA ELECTRONICA AUTOSTOP	ELECTRONIC AUTOSTOP PLAQUE
I.1242	CABLEADO BASIC AUTOSTOP	AUTOSTOP BASIC WIRING
I.1249	TOPE PLACA AUTOSTOP	AUTOSTOP PLAQUE STOP
I.1250	CABLE CONTADOR AUTOSTOP	COUNTER AUTOSTOP WIRING
MI...7	BOTON PULSADOR	PUSH-BUTTON
MI..57	TORNILLO	SCREW
MI..62	ARANDELA	WASHER
MI..80	SOPORTE PULSADOR	SWITCH SUPPORT
MN...1	MONEDERO PARA ARC	ARC COIN BOX
MN...2	MONEDERO PARA BASIC CON CONTAD.	WITH COUNTER FOR BASIC PAY SY
MN...4	MONEDERO PARA BASIC	BASIC COUNTER

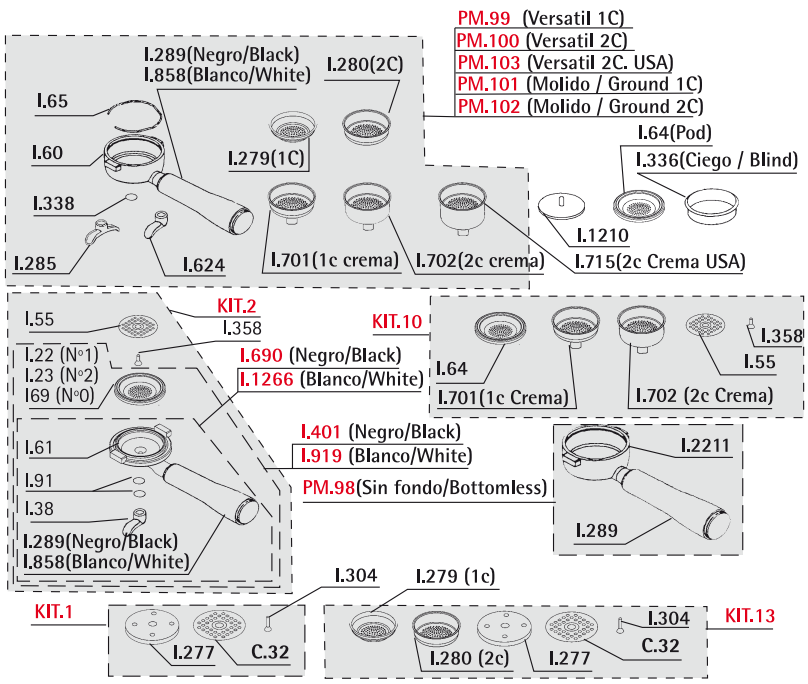

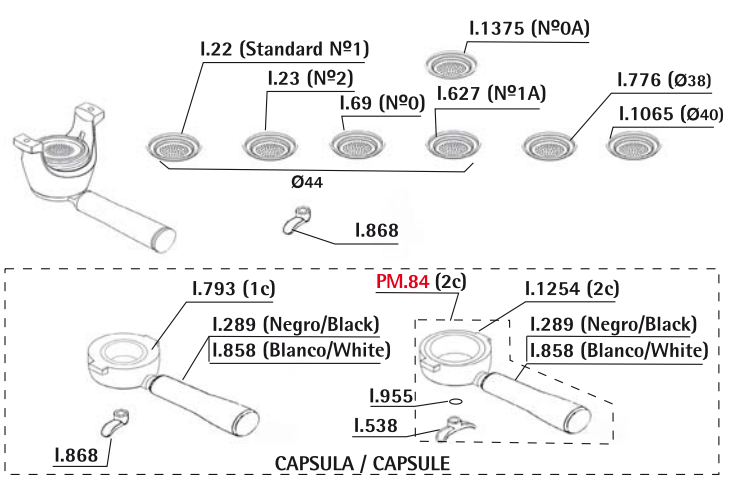

Ref.	Descripción	Description
C..32	DUCHA	SHOWER
I...22	FILTRO CIALDA Nº1	Nº1 POD FILTER
I...23	FILTRO CIALDA Nº2	Nº2 POD FILTER
I...38	SALIDA 1 CAFE LATON	BRASS 1 COFFEE SPOUT
I...55	DUCHA	SHOWER
I...60	CUERPO PORTAFILTRO MOLIDO	BRASS GROUND COFFEE F.HOLDER
I...61	PORTAFILTRO CAFE CIALDA LATON	BRASS POD COFFE F.HOLDER
I...64	FILTRO CIALDA PORTA MOLID	SUPERCREAM FILTER
I...65	ARO RETENCION FILTRO	SPRING FILTER
I...69	FILTRO CIALDA Nº0	NºO FILTER
I...91	JUNTA TORICA EJE	SILICONE RING
I..277	SUPLEMENTO CAFE MOLIDO	GROUND COFFEE SUPLEMENT
I..279	FILTRO 1 CAFE SOLO MOLIDO	I CUP GROUND COFFEE FILTER
I..280	FILTRO 2 CAFES SOLO MOLIDO	2 CUP GROUND COFFEE FILTER
I..285	SALIDA 2 CAFES	2 COFFEES SPOUT
I..289	CONJUNTO MANGO	HANDLE WHOLE
I..304	TORNILLO DUCHA	SHOWER SCREW
I..336	FILTRO CIEGO	BLIND FILTER
I..338	TORICA SALIDA CAFE	COFFEE OUTLET RING
I..358	TORNILLO PORTADUCHA INOX	INOX SCREW
I..401	PORTAFILTRO PASTILLA+FILTRO N1	POD+FILTER Nº1 FILTERHOLDER
I..538	SALIDA 2 CAFES PROF	PROF.2 COFFEES SPOUT
I..624	SALIDA 1 CAFE ROSCADA	THREAD 1 COFFEE SPOUT
I..627	FILTRO CIALDA Nº 1A	Nº 1A FILTER
I..690	PORTAFILTRO PASTILLA	POD FILTERHOLDER
I..701	SUPERCREMA 1 CAFE	1 COFFEE SUPERFOAM
I..702	SUPERCREMA 2 CAFES	2 COFFEES SUPERFOAM
I..715	FILTRO SUPERCREMA USA MONTADO	ENSAMBLE USA SUPERCREAM FILTER
I..776	FILTRO CIALDA DIA. 38	0,38 FILTER
I..793	PORTACAPSULAS	CAPSULE FILTERHOLDER
I..858	MANGO PORTAFILTRO BLANCO	WHITE FILTERHANDLE
I..919	CJTO. PORTADOSIS BLANCO+FILTRO	WHITE PODFILTERHOLDER+FILTER 1
I..955	TORICA SALIDA CAFE PROF.	PROF COFFEE SPOUT RING
I.1065	FILTRO R101 MOKADOR	FILTER R101 MOKADOR GASKET
I.1210	CACILLO CIEGO GOMA	BLIND FILTER
I.1254	PORTA CAPSULA DOBLE	DOUBLE CAPSULE HOLDER
I.1266	CJTO. PORTA CIALDA SIN FILTRO B	POD HANDLE WHOLE (WITHOUT SHOW.)
I.1375	FILTRO CIALDA Nº 0A	Nº 0A FILTER
I.2211	CUERPO PORTAFILTRO SIN FONDO	BOTTOMLESS FILTERHOLDER BODY
KIT..1	KIT PASTILLA - MOLIDO	POD - GROUND KIT
KIT..2	KIT MOLIDO-PASTILLA	GROUND-POD KIT
KIT.10	KIT SUPERCREMA	SUPERCREAM KIT
KIT.13	KIT SUPERCREMA - MOLIDO	SUPERCREAM - GROUND KIT
PM..84	CONJUNTO PORTA CAPSULA DOBLE	DOUBLE CAPSULE HOLDER WHOLE
PM..98	TAFILTRO SIN FONDO	BOTTOMLESS FILTERHOLDER
PM..99	CJTO. PORTAFILTRO VERSATIL 1 CAFE	1 COFFEE VERSATILE F.HOLDER
PM.100	CJTO. PORTAFILTRO VERSATIL 2 CAFES	2 COFFEES VERSATILE F.HOLDER
PM.101	CJTO. PORTAFILTRO MOLIDO 1 CAFE	1 COFFEE GROUND F.HOLDER WHOLE
PM.102	CJTO. PORTAFILTRO MOLIDO 2 CAFES	2 COFFEES F.HOLDER WHOLE
PM.103	CJTO. PORTAFILTRO VERSATIL USA	USA VERSATILE F.HOLDER WHOLE

ascaso